Hunan Rika Electronic Tech Co.,Ltd

Add: Building B5, Taskin, Yuhua District, Changsha City, Hunan Province,China
Website： www.rikasensor.com / www.rikasensor.com.cn
E- mail： sales@rikasensor.com
Tel/Fax： +86-731-85132979

HUNAN RIKA ELECTRONIC TECH CO., LTD

Make Your Measurement

Easy Accurate & Smart

湖南瑞仪卡电子科技有限公司
HUNAN RIKA ELECTRONIC TECH CO., LTD

About us

INTRODUCTION

Hunan Rika Electronic Tech Co., Ltd is located in Changsha, the national intelligent manufacturing base. We are a professional sensor manufacturer and solution provider of weather & environmental monitoring for 10+ years.

BUSINESS

Rika is committed to developing and providing cost-effective intelligent IoT environmental monitoring products and services, including: wind energy measurement, solar radiation measurement, air quality monitoring, hydrometeorological monitoring, soil moisture measurement, water quality monitoring, dataloggers and various kind of weather stations and monitoring stations. Products are widely used in meteorological and environmental monitoring fields such as photovoltaic power generation, smart agriculture, aquaculture, sewage treatment, air quality, wind power generation, and traffic monitoring.

DEVELOPMENT

We have introduced modern high-tech production lines. And after years of technology accumulation, we have established a modern R&D and production system and a complete quality control system. Now we are a state-level high-tech enterprise, with more than 20 patent authorizations, and having established close production-study-research cooperations with universities and research institutes in the industry. Our company has already obtained ISO9001, TUV Quality Management System certification, and products have passed CE, ROHS and other international certifications.

Along with the development of business and the diversification of demand, we provide clients with customized and high-quality project solutions through a full range of products and services. With timely and effective support and delivery system, we are offering OEM/ODM solutions to clients for more than 80 countries around the world, and have won wide recognition at home and abroad.

VALUES

Hunan Rika Electronic Tech Co., Ltd. is pursuing to be excellent and perfect, and is committed to providing clients with accurate, high-quality and intelligent measuring instruments and solutions.

CERTIFICATION

HUNAN RIKA ELECTRONIC TECH CO., LTD.

Has been assessed by Zhongjian Certification Co., Ltd in respect of their Quality Management Systems and to comply with:

ISO9001:2015

Approval is hereby granted for registration providing the rules and conditions relating to certification are observed at all times

CERTIFICATION SCOPE:
RESEARCH & DEVELOPMENT AND SALES OF SENSOR

Date of Issue: 2019-10-28
Expiry Date: 2020-10-28
Certificate Number: U001YQ50336R0S
Organization Code: 91430111MA4L41GBX8

Supplier Assessment

Supplier Assessment Certificate

Certificate No. 18065165_P+T

Hunan Rika Electronic Technology Co., Ltd.
湖南瑞仪卡电子科技有限公司

http://rikasensor.en.alibaba.com

Onsite assessment of the following areas was conducted by TÜV SÜD Certification and Testing (China) Co., Ltd.

√ CompanyOverview	√ HumanResources
√ CurrentExportSituation	√ ExportBusinessCapacity
√ ProductionCapacity	√ QualityAssurance
√ ProductionProcessManagement	√ R&DCapacity
√ CompanyDevelopment/Expansion	√ ProductionFlow
√ Certi fication&Photos	√ CompanyandProductSamples

Valid: 12 Sep 2018 to 11 Sep 2019

Issued by: Alibaba.com
Date of Issue: 11 Sep 2018
Assessed by:
Certificate No. 18065165_P+T

Signature: T. LAN.
Title: Senior Manager, E-Commerce, TÜV SÜD Greater China

Certificate of Compliance

Applicant
Manufacturer
Product: Automatic weather station
Trademark
Test Standard

RoHS

Certificate of Compliance

Certificate No.: CTC190501018C
Applicant: Hunan Rika Electronic Technology Co.,Ltd.
Manufacturer: Hunan Rika Electronic Technology Co.,Ltd.
Product Name: Submersible Liquid Level Transmitter
Trade Name: RKA
Main Test Model: RKL-01
Additional Model: RKL-01
Test Standard: EN 61010 2010, EN 61326 2013, EN 61000-3-2:2014, EN 61000-3-3:2013
As shown in the Test Report No.: CTC190501018R

The EUT described above has been tested by us with the listed standards and found in compliance with the council EMC directive 2014/30/EU. It is possible to use CE marking to demonstrate the compliance with this EMC Directive.
The certificate applies to the tested sample above mentioned only and shall not imply an assessment of the whole production.

Shenzhen CTC Testing Co., Ltd.

ISET S.r.l. Unipersonale

CERTIFICATE

Certificat - Certificado- Сертификат - Zertifikat - 证书

1) APPLICANT: (who finally puts the product on the market)
Hunan Rika Electronic Tech Co.,Ltd
No 499# of Yingpin Road , Yuhua District ,Changsha ,Hunan ,China
2) CERTIFICATE NO.: ISETC 00022020014
FILE REFERENCE: TCF(20)-056-LVD/EMC
3) ISET MARK:
4) CAUTION ABOUT CE MARKING (Instruction for the Applicant who puts the product on the EU market)
The label of the CE Marking on the left side should be not less than 5mm height. CE Marking and EC Declaration of Conformity are duties for the manufacturer or its applicant who put the product on the market. This one is responsible to start the CE marking and certification procedure as required by the legislation in force. Only for the products which are completely included into specific Directives or Regulations will be necessary to appoint a Notified Body
5) TYPE OF PRODUCT: Non contact temperature measurement system
MODEL(s): HE100-21
6) LIST OF DIRECTIVES / REGULATIONS STANDARDS (as declared by the manufacturer itself)
Low Voltage Directive 2014/35/EU, Electromagnetic Compatibility 2014/30/EU
EN 61010-1:2001, EN 61326-1:2013, EN 61000-3-2:2014, EN 61000-3-3:2013
7) NOTE: The applicant is aware about the contents and information included in the Mod.VI.0.004.01 Regulation for this type of Certificate that is considered tently accepted. The latest revision of the Regulation is available and can be downloaded from the website www.iset-italy.it. This document is not referred to any evaluation that could be considered as included in the scope of the activities covered by the standard EN ISO 9001 / TS16949 or European Regulation 765/2008.
8) REMARKS: Certificate is issued on voluntary application from the Client and it gives to the applicant the right to use and affix the ISET Mark (or point 5) on their products, even if it doesn't imply any assessment on the safety and compliance of the product. ISET declares that the only scope of the assessment is to verify the existence of the declaration issued by the manufacturer or its applicant under its own responsibilities.
9) DATE OF ISSUE: 14/04/2020 EXPIRY DATE: 13/04/2023
10) SIGNATURE: Xiao Zheng
On behalf of the Legal representative

ISET S.R.L.

实用新型专利证书

Certificate of Compliance

Certificate No.: BST160349127000ZY-1EC-1
Applicant: RIKA SENSOR TECHNOLOGY LIMITED
Room 1103, Hang Seng Mongkok Building, 677 Nathan Road, Mongkok, Kowloon Hong Kong
Manufacturer: RIKA SENSOR TECHNOLOGY LIMITED
No.499# of Yingpin Road, Yuhua District, Changsha, Hunan, China
Product Name: WIND DIRECTION SENSOR
Trade Name: RIKA
Main Test Model: RK110
Test Standard: EN55022:2010, EN61000-3-2:2014, EN61000-3-3:2013, EN55024:2010
As shown in the Test Report No.: BST160349127000ZY-1ER-1

The EUT described above has been tested by us with the listed standards and found in compliance with the council EMC directive 2014/30/EU. It is possible to use CE marking to demonstrate the compliance with this EMC Directive.
The certificate applies to the tested sample above mentioned only and shall not imply an assessment of the whole production.

Christina Deng
Manager
Mar. 08, 2016

Shenzhen BST Technology Co.,Ltd.

Certificate of Compliance

中华人民共和国国家版权局
计算机软件著作权登记证书

软件名称：无线气象站系统软件
著作权人：湖南瑞仪卡电子科技有限公司
开发完成日期：2013年12月20日
首次发表日期：2013年12月24日
权利取得方式：原始取得
权利范围：全部权利
登记号：2014SR073135

根据《计算机软件保护条例》和《计算机软件著作权登记办法》的规定，经中国版权保护中心审核，对以上事项予以登记。

No. 00472647

APPLICATIONS

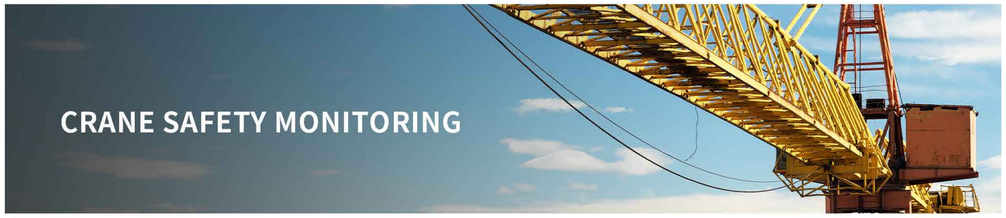

CATALOG

WIND SENSOR 01
Wind Speed Sensor, Wind Direction Sensor, Wind Speed & Direction Sensor, Wind Station

RADIATION SENSOR 13
Radiation Sensor, Pyranometer, Par Sensor, UV Sensor, Illumination Sensor, Radiation Station

AMBIENT SENSOR 20
Air Temperature Sensor, relative humidity Sensor, Pressure Sensor, Dust sensor ,CO_2 Sensor, Noise Sensor

RAIN GAUGE 33
Rain Guage, Rain & Snow Sensor, Rain Gauge Station

SOIL SENSOR 41
Soil Moisture , Temperature , EC, PH Sensor

DATA LOGGER 61
Weather Station Data Logger

WEATHER STATION 67
Automatic Weather Station, Ultrasonic Weather Station

WATER SENSOR 71
Submersible Liquid Level Sensor,Radar Level Sensor, Ultrasonic Level Meter, Water Quality Sensor

RADIATION SHIELD 78
Multi-Plate Radiation Shield,Fan Aspirated Radiation Shield

ACCESSORIES 82
Solar Power Supply, Transmission Module

RK100-01 Wind Speed Sensor

The RK100-01 Wind Speed Sensor is specifically designed to accurately and reliably measure wind velocity under the adverse environmental conditions. Digital circuits capable of strong RFI & EMI resistance and automatic temperature compensation are build-in, it outputs voltage and current signals by electromagnetic induction, the value and horizontal wind speed are linear relation.Shell is made of high-strength aluminum alloy, the wind cup is made of 304 stainless steel, the PCB board is painted with anti-corrosion coating, featured with water proof, corrosion resisting. Inside and turning position have sealing rings with nice sealing function, stop water, salt fog and dust getting in.The RK100-01 Wind speed sensor has good performance in harsh environment.

FEATURES

- Low starting threshold
- Massive all-metal construction
- Strong corrosion resistant ability
- Stainless steel Wind cup, anti-wind load until 70m/s
- Double bearing design
- Surge protection design
- Easy Installation

Output	Pulses	4-20MA	RS485	0-2V/0-5V/0-10V
Supply Voltage	5-24VDC	12-24VDC	12-24VDC	12-24VDC
Load Capacity	>2kΩ	<500Ω(typ 250Ω)		>2kΩ
Range		0-30m/s,0-60m/s		
Accuracy		± (0.3+0.03V) m/s		
Response time		<1s		
Starting Threshold		<0.3m/s		
Limit wind speed		70m/s		
Ingress Protection		IP65		
Operating Temperature		-30℃-+70℃		
Weight(unpacked)		240g		
Dimension		Cup rotor:ø220mm,Height:175mm		
Main material		Cup:304stainless steel, Main Body:Aluminum alloy		
Finish		Polyester powder electrostatic spraying(black)		
Storage Condition		10℃-60℃@20%-90%RH		

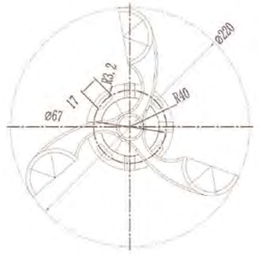

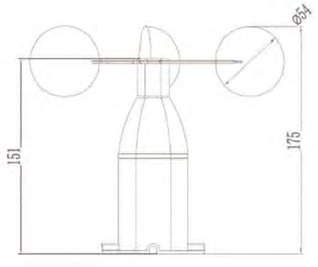

RK100-02 Wind Speed Sensor

The RK100-02 Wind Speed Sensor uses a sensitive 3-cup anemometer designed to measure wind speed and wind run. The cups are made of carbon fiber material, with high intensity and low starting threshold. The signal processing units are built in the housing shell. It can be widely used in meteorology, marine, environmental monitoring, airport, harbor, laboratory, industrial and agricultural areas.

FEATURES

- Low starting threshold
- Overall carbon fiber material
- Strong corrosion resistant ability
- Light structure
- Various output signals optional
- Easy Installation

Output	Pulses	4-20MA	RS485	0-2V/0-5V/0-10V
Supply Voltage	5-24VDC	12-24VDC	12-24VDC	12-24VDC
Load Capacity	>1kΩ,default:high level:5V	<500Ω(typ 250Ω)		>1kΩ
Range		0-45m/s		
Accuracy		±(0.3+0.03V)m/s; (V is the current wind speed)		
Resolution		0.1m/s		
Starting Threshold		<0.5m/s		
Limit wind speed		50m/s		
Ingress Protection		IP65		
Operating Temperature		-40℃~ +50℃		
Weight(unpacked)		170g		
Dimension		Cup rotor:ø179mm,Height:160mm		
Main material		Carbon fiber		
Storage Condition		10℃-50℃@20%-90%RH		

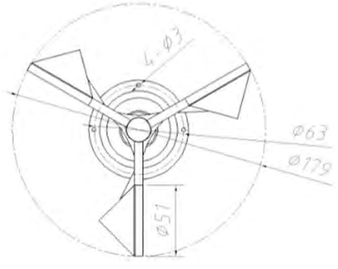

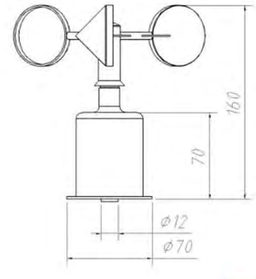

RK100-05 Pipe Wind Speed Sensor

RK100-05 Pipe Wind Speed Sensor is designed on the basis of the principle of hot-wire, the probe and housing adopt resistance to high temperature and anti-corrosion materials . In the bad environment, it also can work stablely and reliably.It can quickly and accurately tiny air flow measurement. The product has realized high precision and high resolution through internal linear compensation and temperature calibration, and long term stability is extremely good, which should be installed directly .

FEATURES

- High accuracy in low speed
- High resistance to the instantaneous wind speed
- Strong corrosion resistant ability
- Wide range, good stability
- Various output signals optional
- Easy Installation

ITEM	SPECIFICATION
Output	4-20mA,0-10V,RS485,0-5V
Supply Voltage	12-24VDC
Range	0-5m/s,0-10m/s,0-20m/s,0-30m/s
Response time	<1s
Accuracy(0-50℃)	±0.2%FS
Resolution	<0.05m/s
Power consumption	<80mA@24VDC(4-20mA)<60mA@24VDC(RS485,0-5V,0-10V)
Long-term stability	±0.1m/s per year
Display	optional
Ingress Protection	IP55
Operating Temperature	-20℃-+70℃
Main material	ABS
Probe length	210mm typ., Other length can be customized
Storage Condition	10℃-60℃@20%-90%RH

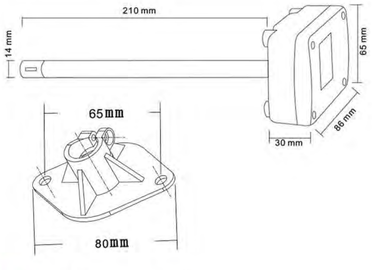

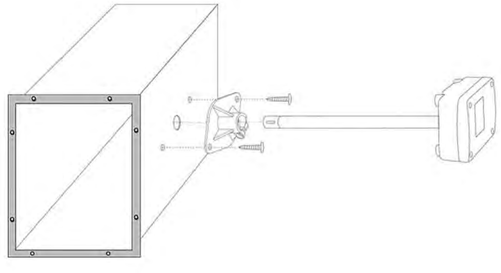

RK100-06 Pipe Wind Pressure Sensor

RK100-06 shell is made of flame retardant and corrosion-resistant material. Based on the principle of pitot tube pressure measurement, the gas required for measurement is very little. The performance of RK100-06 shell is equally reliable even in harsh environment with a small amount of dust. The product can obtain higher reliability and repeatability by using digital linear compensation and temperature compensation.

FEATURES

- High accuracy
- High resistance to the instantaneous wind speed
- Strong corrosion resistant ability
- Wide range, good stability
- Full pressure (dynamic pressure + static pressure) can be measured by orifice alignment with wind direction.
- Easy Installation

ITEM	SPECIFICATION
Output	0-100Pa,0-250Pa,0-500Pa,0-1000Pa,0-2000Pa,0-5000Pa,0-10000Pa
Supply Voltage	24VDC
Range	4-20mA,0-10V,RS485
Response time	<1s
Accuracy	±1%FS
Resolution	1Pa
Power consumption	<40mA@24VDC(4-20mA)<20mA@24VDC(RS485,0-10V)
Long-term stability	±0.1m/s per year
Display	LCD optional
Ingress Protection	IP65
Operating Temperature	-20℃-+70℃
Main material	Flame retardant ABS
Probe length	220mm typ., Other length(<1500mm) can be customized
Storage Condition	10℃-60℃@20%-90%RH

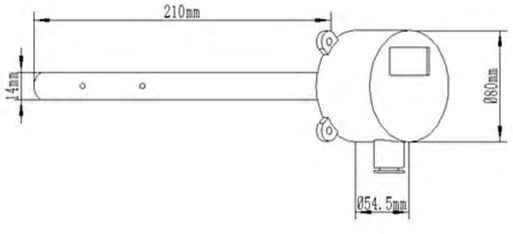

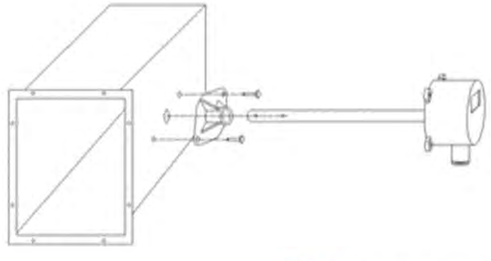

RK110-01 Wind Direction Sensor

The RK110-01 Wind direction sensor is a sensitive wind direction indicator that gives a visual indication of wind direction. Digital circuits capable of strong RFI & EMI resistance and automatic temperature compensation are build-in.The construction of the sensor reflects the requirements for reliability and durability. Only the highest quality corrosion resistant materials, such as high strength aluminum and stainless steel are used. The sensor has good resistance to sand,dust, salt spray and fungus resistance.This sensor is ideal for wind resource assessment studies and similar applications requiring accuracy, reliability and minimal maintenance.

FEATURES

- Low starting threshold
- Massive all-metal construction
- Strong corrosion resistant ability
- Various output signals optional
- Surge protection design
- Double bearing design
- Easy Installation

ITEM	SPECIFICATION		
Output	4-20mA	RS485	0-2V/0-5V/0-10V
Supply Voltage	12-24VDC	12-24VDC	12-24VDC
Load Capacity	<500Ω(typ. 250Ω)		>2kΩ
Range	0-360°		
Accuracy	±3°	±3°	±3°
Resolution	1° or 22.5°	1° or 22.5°	1° or 22.5°
Starting Threshold	<0.5m/s		
Limit wind speed	70m/s		
Ingress Protection	IP65		
Operating Condition	-40℃-+70℃@≤100%RH		
Weight(unpacked)	410g		
Main material	Vane:304stainless steel, Main Body: Aluminum alloy		
Finish	Polyester powder electrostatic spraying(black)		
Storage Condition	10℃-60℃@20%-90%RH		

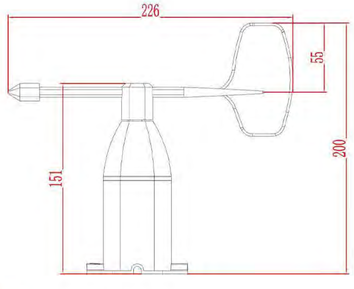

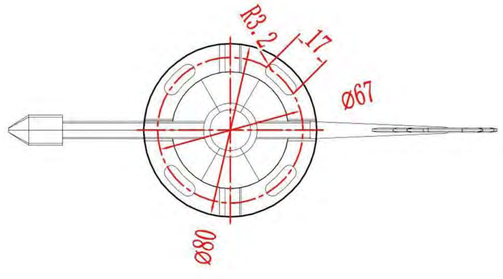

RK110-02 Wind Direction Sensor

The RK110-02 wind direction sensor is a sensitive wind direction indicator that gives a visual indication of wind direction. High precision magnetic sensitive chips are built in the housing shell. The wind vane is constructed on low inertia light metal to show wind directions. The product is wide range, good linearity, strong anti- lightning strike, good performance.

FEATURES

- Low starting threshold
- Great dynamic characteristics
- Overall carbon fiber material
- Strong corrosion resistant ability
- Light structure
- Various output signals optional
- Easy Installation

ITEM	SPECIFICATION		
Output	4-20mA	0-5V	RS485
Supply Voltage	5V,12V-24V	5V,12V-24V	5V,12V-24V
Load Capacity	<500Ω(typ 250Ω)	>1kΩ	
Range	0~360°		
Accuracy	±3°		
Resolution	1°		
Limit wind speed	<0.5m/s		
Ingress Protection	IP65		
Operating Temperature	-40℃~+50℃		
Cable Grade	Nominal voltage:300V ,Temperature grade:80℃		
Weight(unpacked)	195g		
Main material	Turning Radius:147mm,Height:199mm		
Probe length	Carbon fiber		
Storage Condition	10℃-50℃@20%-90%RH		

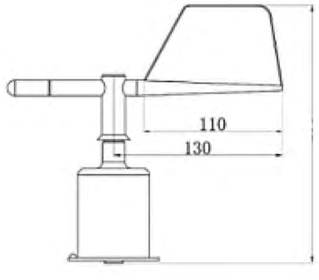

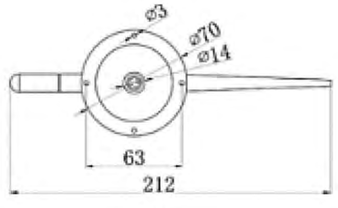

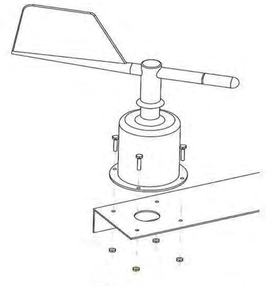

RK120-01C Combined Wind Speed & Direction Sensor

RK120-01C Combined Wind Speed & Direction Sensor is assembled with aluminum alloy precision machined parts, which has high strength and convenient installation.The wind speed part adopts the traditional three-wind cup structure, the wind cup is made of carbon fiber material, the starting performance is good, the measuring range is large, the linearity is good, stable and reliable.The wind direction part adopts low inertia wind direction to respond to the wind direction. When the wind direction changes, the tail wheel drives the angle sensor to sense the azimuth change, thereby generating a change of electrical signal output, good linearity, high precision, and no blind zone.

FEATURES

- Combined wind speed & direction sensor
- Low starting threshold
- Good corrosion resistance
- Compact and light design
- Easy installation

ITEM	Wind speed	Wind direction
Range	0-45m/s(current or voltage ouput);0-70m/s(pulse,RS485,RS232 output)	0-360°
Resolution	0.1m/s	1°
Accuracy	±(0.3+0.03V)m/s ,V is current wind speed	≤±3°
Acquisition Cycle	3s	
Starting wind speed	0.5m/s	
Limited wind speed	75m/s	
Supply	5V(only for digital output),12-24VDC	
Output Signal	RS485,4-20mA,0-5V,RS232,pulse(NPN,only for wind speed)	
Operating Temperature	-40℃-+70℃	
Ingress Protection	IP65	
Main material	Aluminum alloy and carbon fiber	
Storage	10-60℃@20%-90%RH	
Cable length	Default 2.5m,other length is optional	
Installation bracket	attached	
Weight(unpacked)	700g	

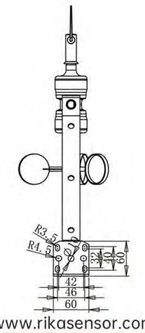

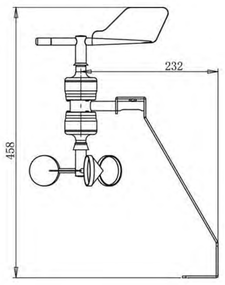

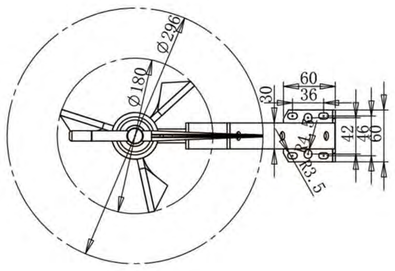

RK120-03 Ultrasonic Wind Speed & Direction Sensor

RK120-03 Economical Ultrasonic Wind Sensor is a fully digital detector, high-precision sensors, integrated by the ultrasonic wind speed and direction sensors. it can accurately and quickly detect the wind speed, wind direction; built-in signal processing unit can output a corresponding signal in response to user needs, with the structure lightweight and compact, no moving parts, high-strength structural design can be accurately detected in the harsh climatic conditions,made the accurate and stable elements, low maintenance, an open communications protocol and so on.It can be widely used in meteorology, oceanography, environment, airports, ports, laboratories, industry and agriculture, and transportation and other fields.

FEATURES

- Adapt to complex weather conditions
- No moving parts, long service life
- The surface preservative treatment
- Strong anti-interference
- High accuracy
- Automatic heating anti-frozen

ITEM	Wind speed	Wind direction	Atmospheric pressure
Range	0-45m/s,0-60m/s	0-360°0-360°	150-1100hPa
Resolution	0.01m/s	1°	0.1hPa
Accuracy	≤10m/s: ±0.2m/s >10m/s: <±2% the current value	±3°	±1 hPa
Starting Threshold	0.1m/s	0.1m/s	
Extreme Wind Speed	60m/s		
Power Supply	12-24VDC		
Power consumption	<1W(Heating not activated); <3W(Heating activated)		
Output Signal	RS232/RS485(Modbus/NMEA-0183),4-20mA(only for wind speed & direction) optional		
Operating Temperature	-40℃-+80℃		
Ingress Protection	IP66		
Heating power	3W max.		
Electronic compass	optional		
Atmospheric pressure	optional		
Dimension	Φ145*138mm		
Weight(unpacked)	0.8kg		
Main material	Anti-radiation ABS Engineering plastic		

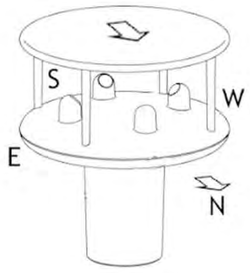

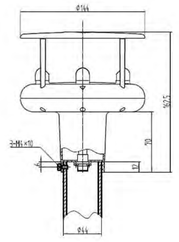

installation type 1

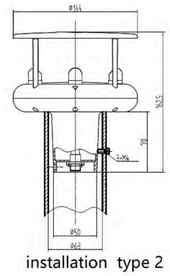

installation type 2

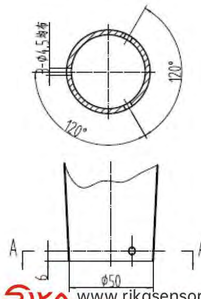

RK120-07 Ultrasonic Wind Speed & Direction Sensor

RK120-07 The wind speed and direction meter is a kind of measuring instrument which uses the time difference of ultrasonic wave in the air to measure the wind speed and direction. RK120-07 uses low-power chip with power consumption of only 0.2W, which is especially suitable for solar or battery powered environment with high power consumption requirements. Due to the adoption of new technology and new process, the structure is more compact and compact. Optional temperature and air pressure module.

FEATURES

- Adapt to complex weather conditions
- No moving parts, long service life
- The surface preservative treatment
- Strong anti-interference
- High accuracy

ITEM	Technical Specification		
Power Supply	12-24VDC		
Power consumption	1.7W		
Output Signal	RS232/RS485(Modbus or NMEA-183), SDI-12		
Operating Temperature	-30℃-+60℃		
Ingress Protection	IP65		
Dimension	Φ82*108mm		
Weight(unpacked)	0.8kg		
Main material	ABS		
ITEM	**Range**	**Resolution**	**Accuracy**
Wind speed	0-40m/s	0.1m/s	±3%
Wind direction	0-360°	1°	±3°
Starting Threshold	0.1m/s	0.1m/s	
Extreme Wind Speed	60m/s		

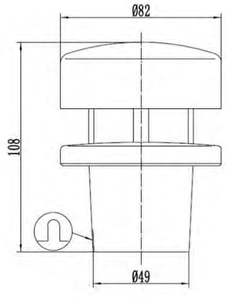

RK120-08 Ultrasonic Wind Speed & Direction Sensor

RK120-08Ultrasonic Wind Speed & Direction Sensor's work principle is by ultrasonic transit~time to measure the wind speed. The Anemometer has the feature of light weight, no moving parts, durability. And again, no need maintenance and on~site calibration, wind speed and direction can also output at the same time. If necessary, customers may select wind speed unit, the output frequency and output format, may also select the heating device (recommended in the cold environment) or analog output. It can connect with computers, data acquisition, or other RS485 or analog output consistent with the collection of equipment. If necessary, you can also form a network of multiple to use. Ultrasonic Anemometer is an advanced equipment of wind speed detection. Because it can overcome the inherent defects of mechanical anemometer, it can work in whole day, long time. it gets more and more widely used and is a powerful replacement of mechanical anemometer.

FEATURES

- No limit to Start wind speed, 360 ° operation, and measure wind speed, wind direction,
- Work whole day, free from rain, snow, frost, weather
- High accuracy; stable
- Strong, resistant corrosion, installation and use without fear of damage;
- Design is flexible, lightweight, portability, easily installation or undo;
- Easily signal access, while provide both analog and digital signals;

ITEM	Wind speed	Wind direction
Range	0-60m/s	0-359°
Accuracy	±2%	±3°
Resolution	0.01m/s	1°
Power Supply	12-24VDC(Heating must be 24VDC)	
Power consumption	<0.2W (Heating not activated); <48W (Heating activated)	
Output Signal	RS232/RS485(Modbus/NMEA-0183),4-20mA,SDI-12	
Wind speed unit	m/s, knots, mph, kph, ft/min	
Ultrasonic output frequency	1Hz (default); 10Hz (optional)	
Operating Temperature	-50℃ - +70℃	
Ingress Protection	IP66	
Heating power	40W max.	
Dimension/ Weight(unpacked)	Φ228*286mm/1.13kg	
Main material	Stainless steel + aluminum alloy	

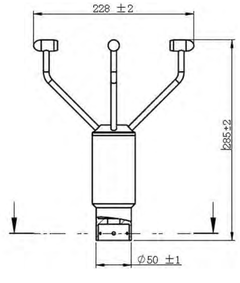

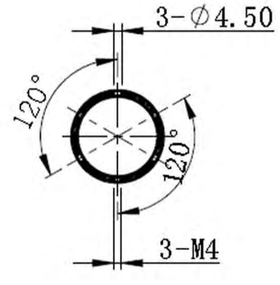

RK150-01 Wind Speed Display Controller

The RK150-01 wind speed display controller gives a visual indication of real-time wind speed , with a LED digital display. In its housing shell, build in a microprocessor with the function of high performance, low power consumption. The wind speed early warn value and alarm value can be set by buttons on the panel. When alarming, the signal output can be controlled by relay. RK150-01 is the companion to our RK100-01 wind speed sensor.

FEATURES

- Easy operation
- Visual display
- Real-time monitoring
- Rapid response
- Low power consumption
- With self-checking function
- 2 relays correspond to early warning and alarm

ITEM	Specification	
Range	0-60m/s	0-216km/h
Resolution(display)	0.1m/s	0.1km/h(<100km/h) 1km/h(≥100km/h)
Accuracy(sensor)	±1m/s	
Alarm response time	<100mS	
Type of alarm	Sound and light alarm	
Contact capacity	5A@30VDC	
Early warning	Any value within 0 m/s ~39 m/s, the early warning value must be lower than the alarm value	Any value within 0km/h ~99km/h, the early warning value must be lower than the alarm value
Alarm	Any value within 1 m/s~40 m/s	Any value within 1km/h ~144km/h
Operating Temperature	-30℃-+70℃	
Power supply	AC100-240V/DC12V/DC24V	
Power consumption	With wire:<3W(sensor & controller) Wireless:sensor: 0.25W,controller: 2.5W	
Ingress Protection	Controller:IP54,wind speed sensor:IP65	
Weight(unpacked)	Controller:315g,wind speed sensor:240g	
Main material	Controller:ABS,wind speed sensor:Aluminum alloy & 304SS	
Storage Condition	10℃-50℃@20%-90%RH	

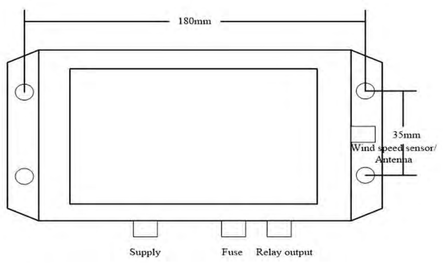

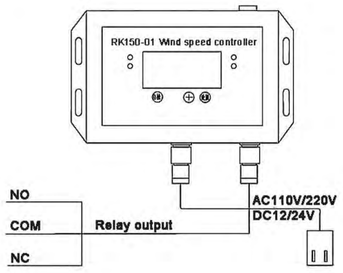

RK160-02 Wind Speed & Direction Station

The RK160-02 wind speed & direction station is a meteorological instrument used to measure and record the wind speed and wind direction. The product adopts high-definition LCD display the current date, time, the wind speed & wind direction value,built-in high-capacity flash memory chip which can be automatically stored for at least one year meteorological data. It is available through three kinds of communication interface (RS232/RS485/USB) establish a communication connection with a computer. The instrument can be widely used in meteorology, agriculture, forestry, environmental protection, marine, airport, port, scientific research and other fields.A complete set of products including RK600-08A data logger, wind speed sensor(RK100-01/RK100-02) & wind speed sensor(RK110-01/RK110-02).The default is RK100-02 &RK110-02,the RK600-08A data logger can also match RK120-01/02/03 to use.

FEATURES

- Easy operation
- Visual display
- Real-time monitoring
- Rapid response
- Large capacity data storage
- Remote monitoring and processing of meteorological data analysis

ITEM	Wind speed(RK100-02)	Wind direction
Range	0-45m/s	0-360°
Resolution	0.1m/s	1°
Accuracy	±(0.3+0.03V)m/s	±3°
Power supply	12VDC(adapter AC100V-AC240V)	
Display	4.3" color touch screen	
Response time	<500mS	
Storage capacity	65000 pieces of data can be stored.	
Recording time interval	1min to 240 min optional	
Communication mode	WIFI, GPRS, Ethernet, RS485(typ.)	
Communication protocol	MODBUS-RTU	
Measurement parameters	32 Max.	
Power consumption	<4W	
Operating temperature	-40℃-+70℃@5%RH ~ 95%RH	
HMI processor	ARM RISC 528MHz	
Relay and alarm output	Customized alarm and relay control output	

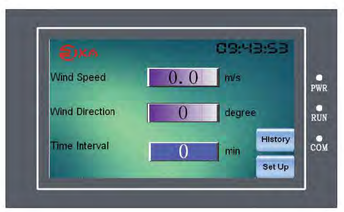

RK200-02 PAR Sensor

The RK200-02 PAR Sensor is mainly used for measuring solar radiation within 400~700nm wavelength. It is easy installation and can work continuously in all weathers. When there is sunlight, voltage output proportional to incident light intensity will be generated by the silicon-photo detector in the sensor. Its sensitivity is proportional to the cosine of incident light direct angle. Each product is with one sensitivity coefficient respectively. It can directly output radiation value in unit of μ*mol/m2*s.

FEATURES

- Metal construction
- Harsh environment workable
- High sensitivity
- No power supply measurement
- Compact size for easy use

ITEM		Specification		
Spectral range	0-2500μ*mol/m2*s	400 ~ 700nm		
	0-2000W/m²	350~1100nm		
Supply		5VDC,12V-24VDC		
Accuracy		±5% rdg		
Range		0-2500μ*mol/m2*s,0-2000W/m2		
Output		0-2000mV	4-20mA(2-wires)	RS485
Sensitivity	0-2500μ*mol/m2*s	800μV/μ*mol*m2*s	6.4μA/μ*mol*m2*s	
	0-2000W/m²	1000μV/W/m2	8uA/W/m2	
Response time		< 1s (99%)		
Temperature effect		< 0.05%/℃		
Cosine correction		< 10% (until 80°)		
Non-linearity		<±2%		
Operating temperature		-40-+80℃		
Shell material		Aluminum alloy		
Storage Condition		10℃-60℃@20%-90%RH		

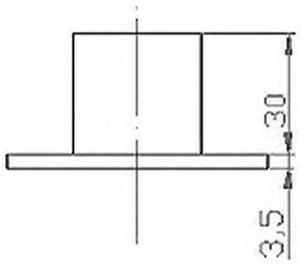

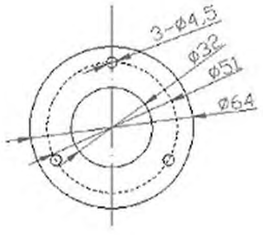

RK200-03 Pyranometer

The RK200-03 Pyranometer is produced based thermopile principle; sensing elements are made by winding - plated thermopiles with multi contacts.Its surface is coated by black coating with high absorption rate. Hot contacts on the sensors surface, while the cold junction is located within the body,temperature difference between the hot and cold junction generates electromotive force, the thermoelectric effect is proportional to the solar radiation. In order to reduce the ambient temperature effect, temperature compensation circuit designed here to reduce the effects to products properties.

FEATURES

- Conform to the WMO standard
- Suitable for harsh environment
- With horizontal bubble
- High sensitivity
- Double transmission glass
- Visual desiccant window
- Easy installation

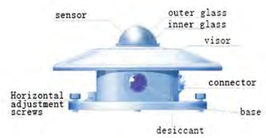

ITEM	Specification
Spectral range	300-3200nm
Supply	5V,12-24VDC⊠
Range	0-2000W/m2
Output	0-20mV,0-5V,4-20mA,RS485
Sensitivity	7-14⊠V*W-1*m2
Internal resistance	350⊠
Non-linearity	<±2%
Measuring angle	2⊠ solid angle
Response time	⊠20s(99%)
Zero drift(temperature drift:5k/h)	±5W/m2
Stability	±2%/year
Cosine correction	⊠±7%(Solar elevation angle=10°)
Temperature effect	±2%(-10℃-+40℃)
Operating temperature	-40℃-+80℃
Recalibration interval	2 years
Desiccant	Silica gel desiccant
Weight(unpacked)	2.5kg
Pack	Aluminum alloy instrument box
Dimension	ø185*120mm
Installation bracket(optional)	Horizontal bracket or adjustable angle bracket
Ingress Protection	IP65
Storage Condition	10℃-60℃@20%-90%RH

RK200-04 Solar Radiation Sensor

RK200-04 Solar Radiation Sensor is designed on basis of silicon-cell principle. It is mainly used for measuring solar radiation within 300 ~ 1100nm wavelength. If the sensing face is downwards, it can test the reflected radiation and solar radiation on the incident to the inclined plane. If shad is added, it can test the scattered radiation. It is widely used to monitor the solar radiation in meteorology, solar energy, agriculture, construction materials aging and atmospheric pollution and etc..

FEATURES

- Designed on silicon-cell principle
- No moving parts, no maintenance, can work in any altitude
- High sensitivity
- Low power consumption
- Light weight, long service life
- Used as sunshine duration sensor

ITEM	Specification
Spectral range	300 ~ 1100nm
Supply	5V,12-24VDC
Range	0-1500W/m2
Resolution	1W/m2
Output	0-5V,4-20mA,RS485
Response time	⩽5s
Cosine correction	⩽±10%(Solar elevation angle=10°)
Non-linear	⩽±3%
Temperature effect	±0.08%/℃
Stability	⩽±2%/year
Operating Temperature	-40℃-+80℃
Ingress Protection	IP65
Weight(unpacked)	420g
Shell material	Aluminum alloy
Storage Condition	10℃-60℃@20%-90%RH

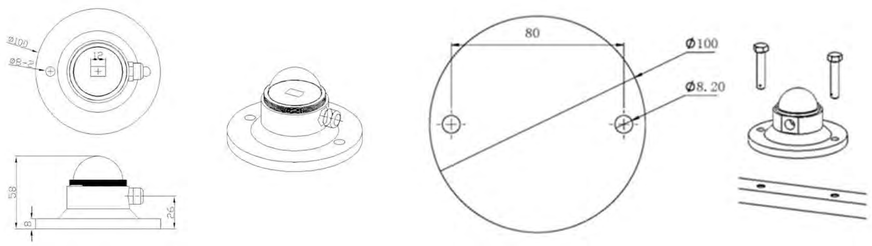

RK200-07 Ultraviolet(UV) Radiation Sensor

RK200-07 UV Radiation Sensor is a precision instrument used to measure the atmosphere of the sun's ultraviolet radiation (UVA & UVB),supporting the product related information acquisition instrument use can provide public concern: the UV index, UV erythema measurement, on the health effects of the UV and UV special biology and chemistry, highly meteorology, industry, construction, medical attention, are widely used in the exposure caused erythema dose, integrated environment ecological effect, the study of climate change and ultraviolet radiation monitoring and forecast.

FEATURES

- Light weight
- No moving parts, no maintenance, can work in any altitude
- High sensitivity
- Low power consumption
- Long service life

ITEM	Specification
Spectral range	280 ~ 400nm
Supply	5V,12-24VDC
Range	0-200W/m2, 0-200uW/cm2(only for 0-2V output), 0-15UV index
Output	0-2V,4-20mA(2 wires),0-5V,RS485
Accuracy	±5% rdg
Response time	⩽1s
Cosine correction	⩽±4%(Solar elevation angle=30°)
Non-linear	⩽±3%
Temperature effect	±0.08%/℃
Stability	⩽±2%/year
Operating Temperature	-40℃-+85℃
Ingress Protection	IP65
Weight(unpacked)	150g
Shell material	Aluminum alloy
Storage Condition	10℃-60℃@20%-90%RH

RK200-08 Automatic tracking solar radiation measurement system

RK200-08 Automatic tracking solar radiation measurement system is an unattended solar radiation monitoring system, which can accurately observe direct, scattered and total solar radiation at the same time.
It use the Angle sensor and the four quadrant balance light sensor technology, automatic tracking the sun, the sun rays remain vertical to the radiation sensor within the cone of light.Track motion trajectory tracking system according to the sun and light way, the combination of 2D automatic control, realize a full automatic real-time tracking of the sun.Products from the base, bench, screw, gear box, motor, microcomputer controller, direct radiation sensor,scattered and total solar radiation, power and other parts.
The product is used to measure the direct and scattered solar radiation in the spectral range of 280 to 3000 nm. It also can be directly measured sunshine time.It can match RK600 series data logger.
It is widely used in photovoltaic environmental monitoring, meteorological radiation observation, agricultural and forestry research and many other fields.

FEATURES

- Conform to the WMO standard
- Simple operation,simple initialization can start measurement,
- High tracking accuracy
- Mounting bracket has good compatibility and can be compatible with similar sensors
- Level adjustment
- Closed-loop mechanical rotation prolongs the service life of the tracker
- Optional AC or DC power supply

ITEM		Direct radiation	Scattered radiation	Total solar radiation(optional)
Spectral range		280-3000nm	400-1100nm	300-3200nm
Range		0-2000W/m2		
Output		0-20mV or Customized(RS485...)		
Sensitivity		7-14μV*W-1*m2		
Internal resistance		Approx. 100Ω	Approx. 350Ω	Approx. 350Ω
Non-linearity		<±2%	<±2%	<±2%
Response time		≤25s(99%)	≤20s(99%)	≤20s(99%)
Stability		±1%/year	±2%/year	±2%/year
Temperature effect		±1%(-10℃-+40℃)		
Operating temperature		-40℃-+70℃,0-100%RH		
TRACKING SYSTEM	Motor	Stepper motor		
	Tracking accuracy	<±0.3°(4h)		
	Torque	12Nm		
	Power consumption	3W		
	Tracking way	Automatic tracking the two-dimensional Angle		
	Supply	DC12V, AC220V or other		
	Speed	50°/s		
	Horizontal Angle(azimuth)	0-200°		
	Vertical Angle(declination)	-15-+90°		
Ingress Protection		IP65		
Operating temperature		-40℃-+70℃,0-100%RH		
Communication interface		RS232,RS485,USB		
Storage Condition		10℃-60℃@20%-90%RH		
Weight(unpacked)		6.5kg(include sensors)		

RK200-17 Ultraviolet (UVC) Radiation Sensor

FEATURES

- Light weight
- High precision
- High sensitivity
- Low power consumption
- Long service life

ITEM	Specification
Spectral range	210 ~ 280nm
Supply	24VDC
Range	0-2000W/m2
Output	4-20mA, RS485
Peak response spectrum	253.7nm
Response time	≤0.5s
Non-linear	±0.1%F.S
Temperature drift coefficient	<-0.1%/℃
Operating Temperature	-20℃-+70℃
Ingress Protection	IP65
Shell material	ABS /Aluminum alloy
Storage Condition	10℃-60℃@20%-90%RH

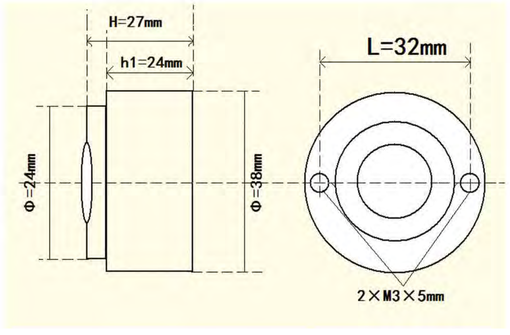

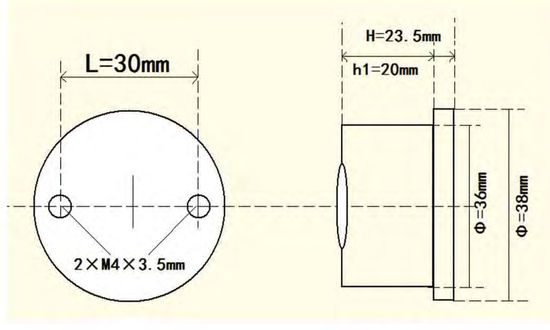

RK210-01 Illuminance Sensor

RK210-01 Illuminance Sensor is very sensitivity and can detect weak light, has a wide measuring range, high accuracy, good waterproof performance, easy to use, easy to install. It' s suitable for most applications, especially in agricultural greenhouses, urban lighting and other places.

FEATURES

- High sensitivity
- Applicable to various harsh environments
- High precision, wide measuring range
- Compact size
- Easy installation

ITEM	Specification	
Range	0-2000lux,0-20klux,0-200klux optional	
Spectral range	380-780nm	
Supply	5VDC,12-24VDC	
Output	4-20mA,0-5V,0-10V	RS485
Accuracy	<±5%FS	<±4%FS
Response time	1s	
Temperature effect	±0.2%/℃	
Repeatability	<1%FS	
Display	LCD optional(ABS housing)	
Operating temperature	-40℃-+75℃	
Weight(unpacked)	170g	
Shell material	ABS,metal shell can be customized	

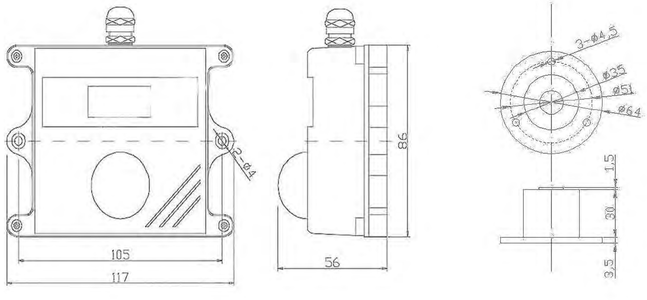

RK220-01 Paste Type Temperature Sensor

RK220-01 Paste Type Temperature Sensor adopts high precision thermistor as the sensing component. It is with high accuracy, good stability. The signal conversion module can convert temperature to corresponding voltage, current or RS485 optionally. RK220-01 Past type temperature sensor is compact, easy-to-install, with good linearity, strong load capacity,

FEATURES

- Strong corrosion resistant ability
- High accuracy
- Wide range, good stability
- Various output signals optional
- With high temperature resistant adhesive, convenient installation
- Easy Installation

ITEM	Specification			
Range	210 ~ 280nm			
Supply Voltage	5VDC,12-24VDC			
Accuracy	±0.5℃			±0.3℃
Output	4-20mA	0-5V	RS485	PT100/PT1000 3-wires
Load Capacity	≤250Ω	≥1K		
Ingress Protection	IP65			
Operating Temperature	Probe: -50℃-+120℃ Conversion module:-40℃-+85℃			
Weight(unpacked)	Probe: 85g			
Transmitter module dimension	98*66*49mm or Φ25*120mm			
Storage Condition	10℃-60℃@20%-90%RH			
Surface mount adhesive	Attached			

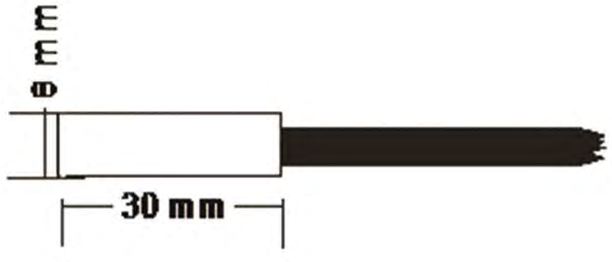

RK300-01 Wall-mounted Barometric Pressure Sensor

RK300-01 Wall-mounted Barometric Pressure Sensor with small size, reliable performance, high precision, long transmission distance, strong anti-jamming capability, which is widely used in meteorology, marine, environment, airports, ports, laboratory, agricultural and transportation and other fields.

FEATURES

- High Sensitivity
- Low temperature Drift
- LCD display optional
- Light construction
- Internal auto compensation
- Temperature compensation

ITEM	Specification
Range	600-1100hPa(mbar)
Resolution	0.1hPa
Accuracy	±0.5hPa
Temperature Drift	≤0.02%FS/℃
Response Time	<1s
Supply	5VDC,12-24VDC
Output Signal	RS485,4-20mA,0-5V, 0-10V optional
Operating Temperature	-40℃-+75℃
Ingress Protection	IP65
Storage	10-60℃@20%-90%RH
Dimensions	117 *86*40 mm
Weight(unpacked)	100g

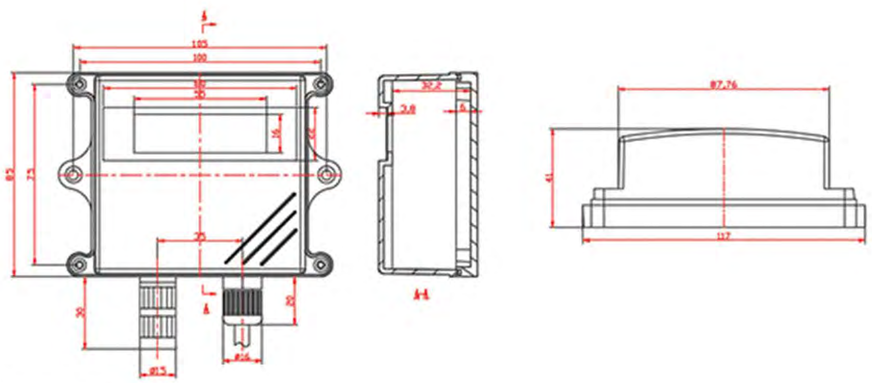

RK300-02 Dust Concentration Sensor

RK300-02 Dust Sensor using laser scattering principle, detecting the existence of dust particle concentration in the air, the minimum can detect 1.0um particles, has a good consistency and stability.According to different usage environment ,there are indoor type and outdoor type to select.

FEATURES

- High Sensitivity
- Fast response
- Low power consumption
- Excellent stability
- Long service life

ITEM	Specification
Sampling object	PM1.0,PM2.5,PM10 Concentration
Range	0-1000ug/m3
Accuracy	±3%FS@25℃
Supply	5VDC,12-24VDC
Output	4-20mA,0-5V,0-10V,RS485
Power Consumption	<50mA@24V(4-20mA)
Warm Up Time	3min
Response Time	<90s
Temperature Drift	≤0.2%FS/℃
Stability	<±2%FS
Repeatability	<±1%FS
Operating Temperature	-20℃-+50℃@15-80%RH
Storage	-40-60℃@20%-90%RH
Shell material	ABS

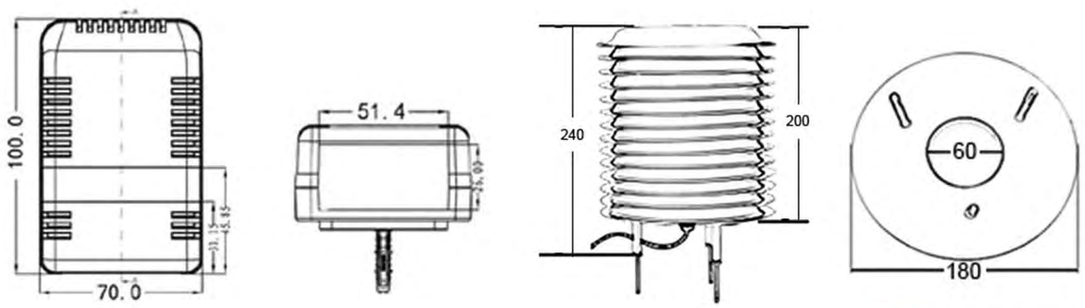

RK300-03 CO2 Concentration Sensor

RK300-03 CO2 transmitter is using NDIR principle to detect the CO2 concentration in the air, designed with advanced infrared absorption gas detection technology ,a precise optical path and an excellent circuit. A temperature sensor built-in realizes temperature compensation to ensure the accuracy of measurement. It is without oxygen dependence , of long service life.

FEATURES

- High Sensitivity
- Fast response
- Effective resistance to water vapor
- Excellent stability
- Long service life

ITEM	Specification
Range(concentration)	0-5000ppm,0-10000ppm
Accuracy	±50ppm+2%rdg @25℃
Supply	5VDC,12-24VDC
Output	4-20mA,0-5V,RS485
Power Consumption	<0.25W
Warm Up Time	3min
Response Time	<20s
Temperature Drift	≤0.2%FS/℃
Stability	<±40ppm/year
Repeatability	<±1%FS
Operating Temperature	-20℃-+60℃@15-80%RH
Storage	-40-70℃@20%-90%RH
Shell Material	ABS

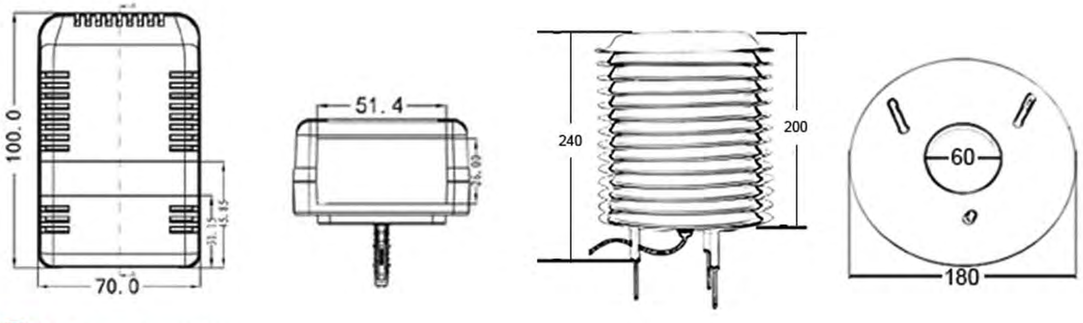

RK300-04 Leaf Wetness Sensor

RK300-04 Leaf Wetness Sensor is an important tool for observing and studying leaf wetness, preventing pests and diseases, and spraying sprinkler control. The accurate measurement of the moisture content of the leaf surface can be used to monitor the trace moisture or ice crystal residue. The shape of the sensor is simulated by the blade, which can simulate the characteristics of the leaf surface, so that it can reflect the situation of the leaf surface more accurately. By measuring the variation of the dielectric constant of the upper surface of the blade, the mist, water vapor and ice can be measured.

FEATURES

- Reflect the water content of leaf
- Fog, freezing, condensation and rainfall can be detected
- Good waterproof sealing performance
- High precision, fast response, reliable performance.
- Multiple signal output options

ITEM	Specification
Sampling object	PM1.0,PM2.5,PM10 Concentration
Range	0-1000ug/m3
Accuracy	±3%FS@25℃
Supply	5VDC,12-24VDC
Output	4-20mA,0-5V,0-10V,RS485
Power Consumption	<50mA@24V(4-20mA)
Warm Up Time	3min
Response Time	<90s
Temperature Drift	≤0.2%FS/℃
Stability	<±2%FS
Repeatability	<±1%FS
Operating Temperature	-20℃-+50℃@15-80%RH
Storage	-40-60℃@20%-90%RH
Shell material	ABS

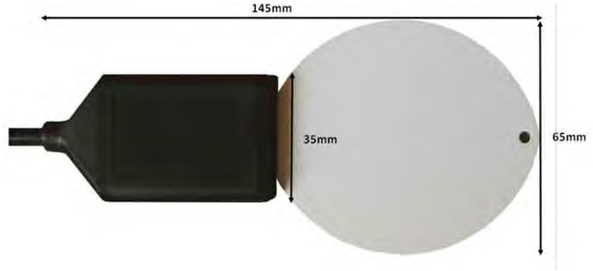

RK300-06 Noise Sensor

Noise sensor is a kind of digital and modular multi-function sound level meter.Using a digital signal processing chip and digital detection technology, has a high reliability, good stability, wide dynamic range, without range switching, etc.Can be widely applied to various machines, vehicles, ships, electrical appliances and other industrial noise measurement, can also be used for environmental noise measurement, labor protection, industrial hygiene.

FEATURES

- High Sensitivity
- Fast response
- Low consumption
- Excellent stability
- Long service life

ITEM	Specification
Range	30-130dB
Accuracy	±3dB@23±5℃,accordance with IEC 61672 standard type 2, calibrated at 94dB(1kHz) input
Frequency response	31.5Hz - 8kHz.
Corrector	B&K 4226
Microphone	Capacitive microphone , size: 0.5 inch
Supply	5VDC,12-24VDC
Ingress Protection	IP65
Output	RS485
Power Consumption	<20mW
Response Time	<200ms
Operating Temperature	-10℃-+50℃@5-80%RH
Storage	-40-70℃@20%-90%RH
Shell Material	ABS & 304SS

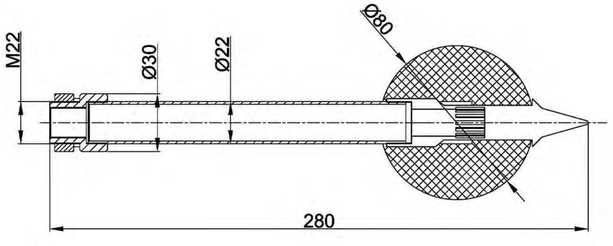

RK300-07 NH_3 Concentration Sensor

RK300-07 NH3 Concentration Sensor is composed of three electrode electro-chemical sensor and high performance microprocessor, the built-in temperature sensor for temperature compensation, can accurately measure the ammonia concentration environment, perfect combination of electro-chemical sensors and transmitting circuit is satisfy for ammonia concentration detection.

FEATURES

- High Sensitivity
- Fast response
- Low consumption
- Excellent stability
- Long service life

ITEM	Specification
Range(concentration)	0-100ppm
Accuracy	±5%FS@25℃
Resolution	1ppm
Supply	5VDC,12-24VDC
Output	4-20mA,0-5V,RS485
Power Consumption	<50mA@24V(4-20mA)
Response Time	<15s
Temperature Drift	≤0.2%FS/℃
Repeatability	<±1%FS
Operating Temperature	-20℃-+50℃@15-80%RH
Storage	-40-70℃@20%-90%RH
Shell Material	ABS

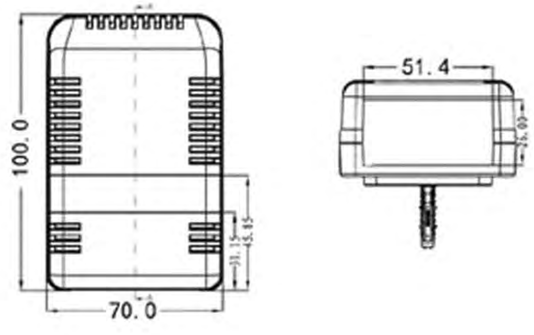

RK300-10 Visibility sensor

The forward scatter measurement principle and unique design ensure the output accurate and reliable in all weather conditions and will not be influenced by local lights sources, even the flash.With a measurement range of 10m to 10km the sensor is suitable for use in road and aviation constructed from robust aluminium and finished with a high quality powder coat, the sensor will provide years of reliable service. Heating of the optical windows and sensor hoods is provided as standard allowing use in the harshest of conditions.Both optical windows are monitored for contamination and the visibility output is automatically compensated to reduce maintenance requirement.

FEATURES

- Applicable to highway, port, ship and environmental visibility detection
- Using aluminum alloy material, strong and lightweight
- Hood heating for use in extreme environments
- Simple structure, good working stability, high reliability, low energy consumption, easy to use and maintain
- Not affected by local lights
- Low maintenance requirement

ITEM	Specification
Measurement Range	5-75000m
Measurement Principle	Forward scatter
Resolution	1m
Accuracy	±10%
Data update rate	1s(default)
Supply	12-24VDC
Output	RS485,RS232
Power Consumption	Approx.1W, (heating: 6W MAX.)
Dimension	710*250*175mm
Installation	Hoop installation
Lifetime	>10 Years
Operating Temperature	-40℃-+70℃@0-100%RH
Weight	3kg
Shell Material	Aluminium alloy

RK300-12 Differential Pressure Transmitter

Based on piezo-resistive silicon technology,differential pressure transmitter uses silicon differential pressure sensors with stainless steel isolated diaphragm as measuring elements. Made of 316L stainless steel and designed of rigid and robust construction, which has a feature of that zero point and full range can be adjusted. It is suitable for application in harsh environment and measurement with corrosive pressure media.
This product has widely been used for measurement of differential pressure of pipeline fluids in petroleum industry, chemical industry, electric power hydrology etc.

FEATURES

- Easy to install， small size
- Perfect long term stability
- Zero point and full range can be adjusted
- Have short-circuit protection
- Have reverse polarity protection

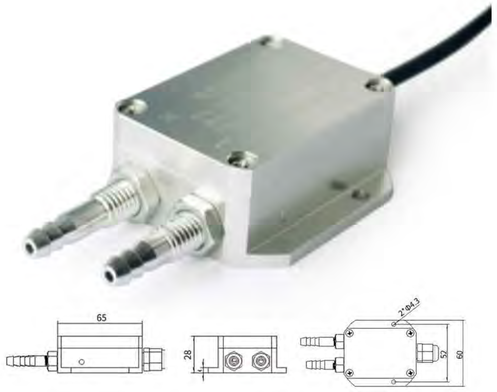

ITEM	Specification
Pressure medium	gas liquid compatible stainless steel
Pressure ranges	0pa -200pa .....100 kpa
Overload pressure	<300%FS
Pipe hydrostatic pressure	3 ,5 , 10 times of Full pressure , 20Mpa
Output signal	4~20mA, 0~5V, 0~10V, 1~5V
Accuracy	0.5%FS (standard)
Load resistance	RL = (U-10)/0.02(ohm) (4~20mA current output)
Long term stability	<0.25%FS/year
Supply voltage	12~30Vdc
Media temperature range	-30~70°c
Operating temperature range	-40~+85°c
Storage temperature range	-10~+70°c
Temperature coefficient of zero	0.3%FS/10°c
Temperature coefficient of span	0.3%FS/10°c
Insulation resistance	>100M(ohm)@ 50VDC
Process connection	G1/4 or others
Electrical connection	DIN 43650 or others
Material of pressure membrane	316L
Material of housing	304SS,Aluminium alloy
Electromagnetic compatibility	Electromagnetic radiation: EN50081-1/-2; Electromagnetic sensitivity: EN50082-2;
Lightning proof A	Air-conduction pressure : 8000V, Shell & cable conduction pressure: 4000V
Weight	300g
IP grade	IP65

RK300-13 VOC Sensor

The RK300-13 volatile organic compound gas sensor module is based on the principle of PID photoelectric ions. It is a standardized and modular gas detection product independently developed and produced by our company; it is mainly used to solve the variety of gas detection and the incompatibility of various brands of gas sensors. The production calibration is complex, and the replacement of core components is limited. After adopting PH series intelligent volatile organic compound gas sensors produced by our company, only one product needs to be developed to quickly respond to customer needs for different gas types; And the production process is simplified, that is, buy and use, no need to re-calibrate, greatly reduce the company's R&D and production costs, and product quality can be immediately upgraded to world-class standards.

FEATURES

- High sensitivity
- Fast response
- Excellent stability
- Long service life

ITEM	Specification
Range(concentration)	0-10PPM
Resolution	0.001PPM
Accuracy	± (4ppm+2%F•S)
Supply	12VDC,24VDC
Output	RS485,4-20mA
Power Consumption	4.8mW
Response Time	<30s
Zero Drift	≤±1% (F.S/year)
Operating Temperature	-20℃-+60℃@15-80%RH
Storage	-40-70℃@20%-90%RH
Shell Material	ABS

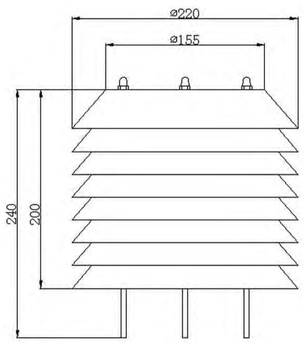

RK310-03 Infrared Temperature Sensor

FEATURES

- Infrared measurement, non-contacted
- stable output fast response
- Compact size
- Easy installation
- Suitable for a variety of applications

ITEM	Specification
Range	0-+100℃
Accuracy	± 1%
Repeatability	± 0.5 ° C
Power Supply	12-30VDC
Output Signal	4-20mA, 0-5V, RS485 optional
The measured object size and measurement ratio	20: 1
Emissivity	0.95
Response time	100ms
Response wavelength	8-14um
Ingress Protection	IP65
Storage	-20-+80℃@20%-90%RH
Shell material	304ss
Mounting bracket	304ss

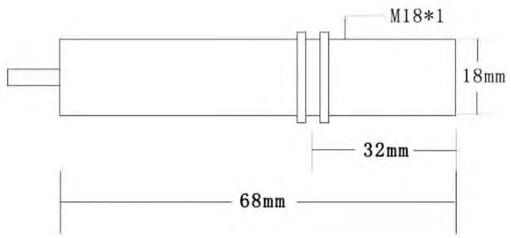

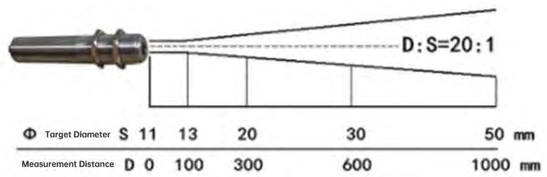

RK330-01 Atmospheric Temperature,Humidity & Pressure Sensor

RK330-01 Atmospheric Temperature, Humidity & Pressure Sensor is a professional measurement of air temperature, relative humidity & barometric pressure. Sensors are built-in the water-proof and anti-UV shelter. It is widely used in agriculture, forestry, meteorology as well as a climate chamber, warehousing and other places.This model also can be equipped with 11 plates radiation shield(RK95-01) to protect the sensors from solar radiation and rain.

FEATURES

- High Sensitivity
- Fast Response Time
- Long Service Life
- Low Consumption
- Good Stability of Output
- High temperature and high humidity environment for long-term use
- Can integrated temperature humidity air pressure at the same time

ITEM	Temperature	Humidity	Pressure
Range	-40-60℃	0-100%RH	10-110kPa(100-1100hPa)
Resolution	0.1℃	0.5%RH	0.1hPa
Accuracy	±0.5℃	±3%RH	±1hPa
Supply	5VDC, 12-24VDC		
Output Signal	4-20mA,0-5V,0-10V,RS485(MODBUS),IIC①		
Current Consumption	<20mA		
Operating Temperature	-40℃-+80℃		
Ingress Protection	IP65		
Storage	10-60℃@20%-90%RH		
Weight(unpacked)	120g		
Probe Material	ABS		
Radiation Shield(optional)	RK95-01,11 plates		

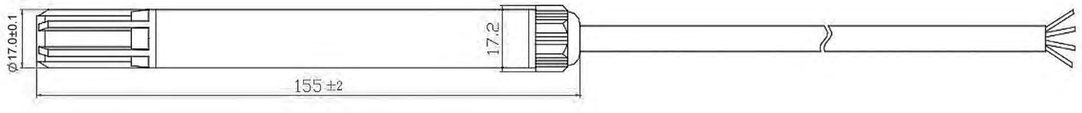

RK330-05 Atmospheric Temperature & Humidity Sensor

RK330-05 Atmospheric Temperature & Humidity Sensor is a professional measurement of air temperature & relative humidity. Sensors are built-in the water-proof and anti-UV shelter. It is widely used in agriculture, forestry, meteorology as well as a climate chamber, warehousing and other places.This model also can be equipped with RK95-02B to protect the sensors from solar radiation and rain.

FEATURES

- High Accuracy
- High Sensitivity
- Fast Response Time
- Long Service Life
- Low Consumption
- Good Stability of Output
- Wide Temperature Range
- Wide Voltage Power Supply

ITEM	Specification	Humidity
Range	-40-+80℃ optional	0-100%RH
Resolution	0.05℃	0.5%RH
Accuracy	±0.2℃	±3%RH,±2%RH,
Supply	12-24VDC	
Output Signal	4-20mA,0-5V,0-10V,RS485(MODBUS)	
Power Consumption (US: power supply)	4-20mA: P≤US*0.02W 0-5V/0-10V: P≤US*0.008W RS485: P≤US*0.015W	
Operating Temperature	-40℃-+80℃	
Ingress Protection	IP65	
Storage	10-60℃@20%-90%RH	
Radiation Shield(optional)	RK95-02B	

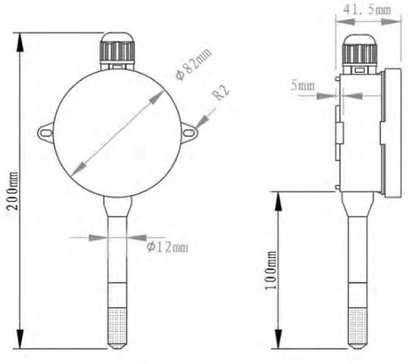

RK400-01 Tipping Bucket Rainfall Sensor

The RK400-01 Tipping Bucket Rainfall Sensor is an instrument for testing rainfall in the nature. In order to meet the requirement of information transmission, processing, recording and display, the amount of rainfall is converted to pulse output. It can be widely used in weather stations, hydrometric stations, agriculture & forestry, defense & field monitoring stations. It can provide the original data for flood-prevention, water-supply system, and reservoir water management in plant.

FEATURES

- Compact size for easy use
- High accuracy, good stability
- Mesh in the funnel preventing debris such as leaves and insects from entering the working of rain sensor(mesh is optional)
- Well made tipping bucket with low resistance
- Highly polished stainless steel construction
- Horizontal Bubble in the bottom
- Rain collector with filter, to prevent the leaves, such as debris jam over the hole
- Optional heating function in cold region

ITEM	Specification
Rainfall collector	Diameter :Φ200mm, height: 350mm
Measured rainfall intensity	Max: 4mm/min
Allow rainfall intensity	Max: 10mm/min
Resolution	0.1mm, 0.2mm
Accuracy(2mm/min)	±4%
Maximum load voltage	30VDC(pulse output)
Maximum load current	20mA(pulse output)
Output	Reed switch pulses,RS485(12-24VDC supply)
Operating temperature(no freeze)	-20-+80℃
Main material	Collector:304SS,tipping bucket:ABS
Tipping bucket	Single
Heating(optional)①	Heating power: approx.350W Heating voltage:220VAC
Collector filter	Removable filter (prevent leaves and sundries)optional
Weight(unpacked)	3.5kg

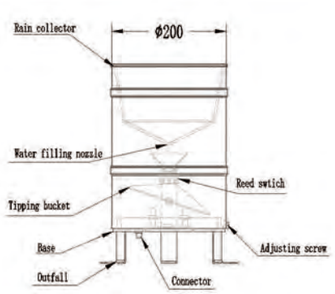

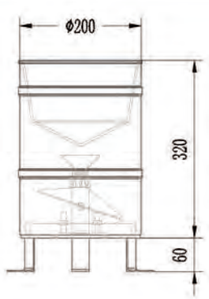

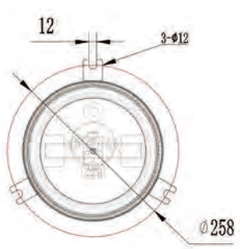

RK400-02 Atmospheric Temperature & Humidity Sensor

RK400-02 Rain & Snow Sensor is a high sensitive detector to achieve qualitative detection of rain and snow. There is a ring conductor sense rain board on the surface. Products are optional automatic melting snow and melting ice function (automatic heating). When it rains or snows, it will output switch signal.

FEATURES

- Environmental monitoring
- Greenhouse control system
- Smart doors & windows
- Smart light box
- Livestock farm
- Intelligent building control system

ITEM	Specifications
Supply Voltage	12-24VDC
Automatic Heating	heating power:10W max.
Output	Relay(NO)
Load Capacity(relay)	AC120V/2A ,DC24V/2A
Coil Material	Gold-plated(Strong corrosion resistance)
Ingress Protection	IP67
Operating Temperature	-30℃-+70℃
Weight(unpacked)	150g
Dimension	90*60*40mm
Shell Material	ABS
Storage Condition	10℃-60℃@20%-90%RH

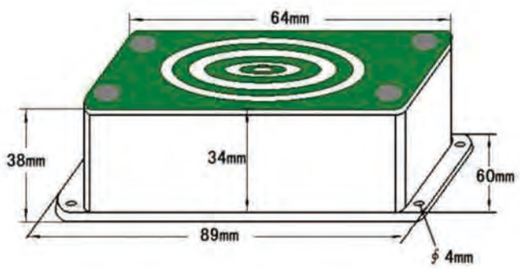

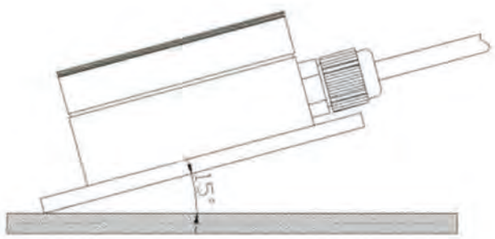

RK400-03 Automatic Rainfall Station

RK400-03 Automatic Rainfall Station is used to measure and record the rainfall information. The LCD display can show the real time rainfall value with, time & date. Large-capacity FLASH memory chips can automatically stored at least one year of meteorological data. The Data logger is equipped with three types of communication interfaces (RS232 / RS485 / USB) which establish communication with the computer. Data of rainfall can be observed remotely through the supporting PC software. Meteorological weather data can be further processed and analyzed by the data logger.The station can be equipped with RK400-01 or RK400-04 rainfall sensor.

FEATURES

- Friendly man-machine interface
- High accuracy
- Large capacity memory
- RS232/RS485/USB interface optional
- Remote monitoring of data

ITEM	Specification
Power Supply	12VDC(adapter AC110V-AC220V),solar power,optional
Measured Rainfall intensity	Max: 4mm/min
Resolution	0.1mm,0.2mm,0.5mm,1mm optional
Accuracy	<±4%
Display	64*14 LCD with back-light
Storage Capacity	4M bit (57344 data points ☒)
Inter-record gap	1min-240min adjustable
Communication Interface②	RS232，RS485，USB optional
Operating Temperature	-40℃-+75℃@5%-95%RH
Install Accessories	Tripod，data logger shelter,cable optional
PC Software	Attached
Dimension	Data logger :165*125*75mm

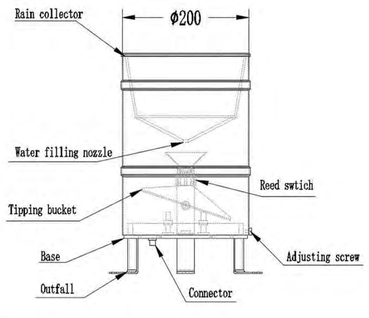

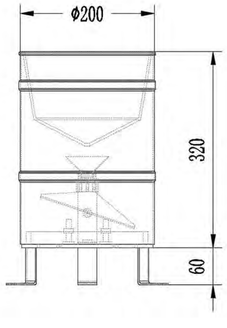

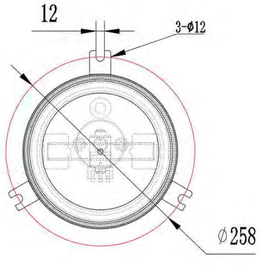

RK400-04 Economical Tipping Bucket Rainfall Sensor

RK400-04 Economical Tipping Bucket Rainfall Sensor is a hydrology, meteorological instrument used to measure the nature of rainfall, and it converts the precipitation into a pulse signal output. Designed with insect-proof nets, free blocking nozzle and built-in leveller. The model can be used in meteorology, hydrology, agriculture, forestry, field monitoring stations and other industries .Combined with rainfall recorder can be used to measure measure precipitation, precipitation intensity, precipitation time.

FEATURES

- Compact size for easy use
- High accuracy, good stability
- Mesh in the funnel preventing debris such as leaves and insects from entering the working of rain sensor
- Well made tipping bucket with low resistance
- The main body made of high strength ABS
- Horizontal Bubble in the bottom
- Outlet with insect-proof screen

ITEM	Specifications
Collector	Diameter :Φ200mm, height: 271mm
Measured rainfall intensity	Max: 4mm/min
Allow rainfall intensity	Max: 8mm/min
Resolution	0.2mm
Accuracy(2mm/min)	±4%
Maximum load voltage	30VDC(pulse output)
Maximum load current	20mA
Output	Pulses(@10kΩ&0.01uF),RS485(12-24VDC supply)
Operating temperature	0-60℃@0%-100%RH
Main material	Rainfall collector & tipping bucket: ABS, Supporting leg:304SS
Weight(unpacked)	2kg

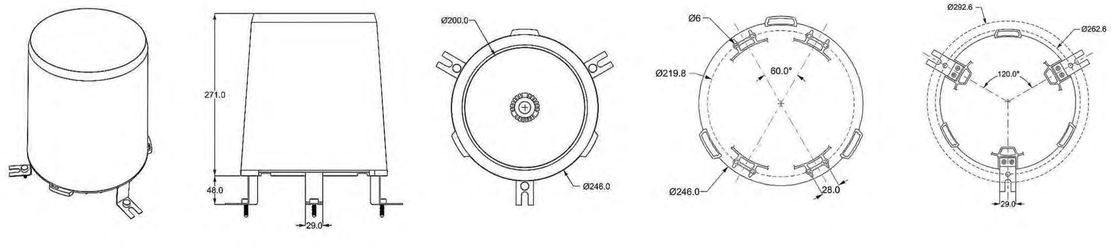

RK400-07 Tipping Bucket Rainfall Sensor

RK400-07 Tipping Bucket Rainfall Sensor is an instrument for testing rainfall in the nature. In order to meet the requirement of information transmission, processing, recording and display, the amount of rainfall is converted to pulse output. It can be widely used in weather stations, hydrometric stations, agriculture & forestry, defense & field monitoring stations. It can provide the original data for flood-prevention, water-supply system, and reservoir water management in plant.

FEATURES

- Compact size for easy use
- High accuracy, good stability
- Mesh in the funnel prevents debris such as leaves and insects from entering the working of rain sensor
- Well made tipping bucket with low resistance
- Highly polished stainless steel construction
- Horizontal Bubble in the bottom
- Rain collector with filter, to prevent the leaves, such as debris jam over the hole
- Double reed switch output

ITEM	Specification
Rainfall collector	Diameter :Φ200mm, height: 350mm
Measured rainfall intensity	Max: 4mm/min
Allow rainfall intensity	Max: 8mm/min
Resolution	0.5mm, 1mm
Accuracy(2mm/min)	±3%
Maximum load voltage	30VDC(pulse output)
Maximum load current	20mA(pulse output)
Output	Reed switch pulses,RS485(12-24VDC supply)
Operating temperature(no freeze)	-20-+60℃
Main material	Collector:304SS,tipping bucket:ABS,base:304SS
Tipping bucket	Single
Weight(unpacked)	3kg

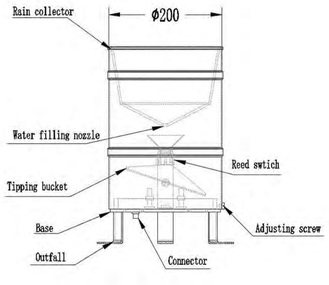

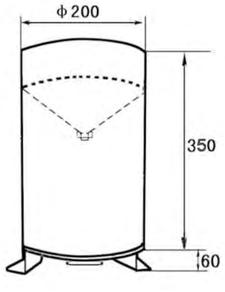

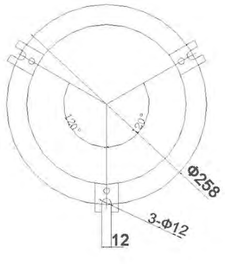

RK400-10 Evaporation Sensor

The product uses the high-precision weighing principle to measure the liquid weight in the evaporation pan, and calculates the liquid level of evaporation loss by measuring the difference of the liquid weight before and after the measurement. The evaporating dish is made with high-quality stainless steel , which has good anticorrosive and anti erosion characteristics. It ensures the measurement accuracy and can be used in conjunction with the automatic weather station or professional evaporation recorder.

FEATURES

- High precision
- Easy installation
- Stable performance, good linearity
- Simple Operation
- Whole stainless steel material
- A variety of signal output

ITEM	Specifications
Evaporation pan	Diameter :Φ200mm
Range	0-75mm
Response time	<1s
Accuracy	±1%
Power Supply	5V,12-24V
Output	4-20mA,0-2V,0-5V,RS485
Operating temperature	-30-+80℃
Ingress protection	IP65
Main material	304SS
Weight(unpacked)	2.5kg

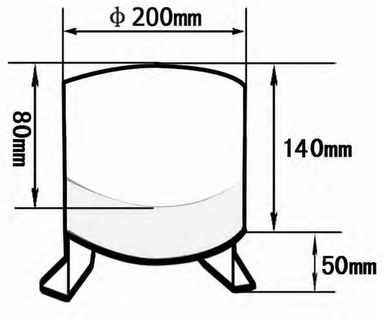

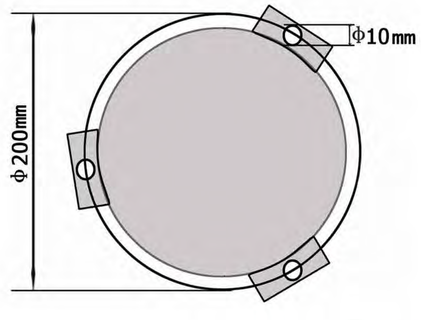

RK400-13 Radar Rainfall Sensor

RK400-13 is a sensor that uses radar wave technology to detect rainfall. It can distinguish the types and intensity of rain, snow and hail. Compared with the traditional mechanical rain gauge, the detection is more sensitive and fast, and there is no need to worry about the influence of the cover of leaves and other objects on the surface of the detector for rainfall detection, and no need for heating device to prevent icing. There are no moving parts inside the product, which is maintenance-free, small in size and low in energy consumption.

FEATURES

- Easy Installation
- High Accuracy, Good Stability
- Maintenance-free
- Compact size for easy use
- Main Aluminum Alloy Material
- Distinguish rain,snow and hail

ITEM	Specification
Measurement Object	Rain, snow, hail
Measured Rainfall Intensity	0-4mm/min
Sample Interval	1s
Resolution	0.1mm
Accuracy(2mm/min)	±4%
Power Consumption	1.6W
Supply	7-24VDC
Output	RS485, RS232, SDI-12 optional
Operating Temperature	-40-+80℃
Main material	Aluminum Alloy+ABS
Weight(unpacked)	0.65kg

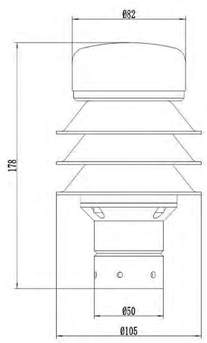

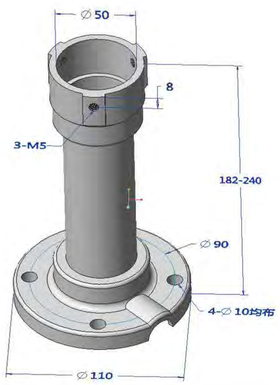

RK400-14 Laser Snow Depth Sensor

The RK400-14 has a large measuring range and high accuracy, with a maximum accuracy of 1mm. It also has super anti-interference ability and is widely used in various industrial control such as steel industry, metallurgical industry, automobile industry, printing industry, food industry, etc., and various field monitoring and inspection sites. The principle of the laser snow depth sensor is the optical triangulation method, and the semiconductor laser is focused on the measured object by the lens. The reflected light is collected by the lens and projected onto the CMOS array; the signal processor calculates the position of the light spot on the array through the trigonometric function to obtain the distance to the object.

FEATURES

- Easy Installation
- High Accuracy, Good Stability
- Maintenance-free
- Compact Size for Easy use
- Large Range

ITEM	Specifications
Range	0.05~1.5m
Laser Characteristics	Red laser diode
Wavelength	620nm ~ 650nm
Laser Class	Level 2
Spot Type	Point
Spot Size	Spot light spot 5mm@10m Line spot 3mmX150mm@10m
Protection Level	IP65
Resolution	1mm
Accuracy	±1mm
Power Consumption	300mA
Supply	9-18VDC
Output	RS485, RS232, 4-20mA,0-5V optional
Operating Temperature	-40-+50℃
Main Material	White steel coated or sprayed
Weight(unpacked)	2.5kg

RK500-01 Soil/Liquid Temperature Sensor

RK500-01 Soil/Liquid Temperature Sensor is used to measure the temperature of the soil or liquid medium, applied to the automatic meteorological station, soil temperature testing, pond or reservoir water temperature detection and other fields. The products can be used into the water or buried in the soil. Sensor with precision thermal resistance as a sensing component, built-in signal sampling and amplification, zero drift and temperature compensation function, has the characteristics of high measuring precision and good stability.

FEATURES

- Real-time temperature measurement
- Good corrosion resistance, suitable for all kind of soil
- High accuracy
- Good linearity
- All stainless steel probe

ITEM	Specification
Range	-20-+50°C,-50-+100°C
Supply	5VDC,12-24VDC
Accuracy	±0.5°C
Response Time	<1s
Output Signal	PT100/PT1000 class A (3-wires),4-20mA,0-5V,RS485
Operating Temperature	-50°C-+80°C
Ingress Protection(probe)	IP68
Storage	10-60°C@20%-90%RH
Size	4-20mA,0-5V,RS485: Probe:Ø8*102 mm,Transmitting module:Ø27*120mm PT100: Probe:Ø6 ×50mm
Probe weight(unpacked)	145g
Housing material	304 stainless steel

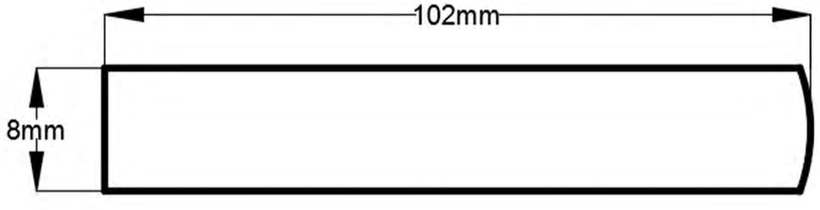

RK500-02 PH Sensor

The soil contains many substances such as organic acid, inorganic acid, alkali and salt, due to the different content of various substances, so the soil shows different ph value.Usually the pH in the range of 6.5-7.5 soil is called the neutral soil.RK500-02 pH sensors measure the pH value should be a good solution without professional calibration instruments, complex operation, expensive and difficult to carry, can be for continuous measurement of soil, waste water pH value, suitable for agriculture, sewage treatment plant, chemical industry, printing and dyeing, paper making, pharmacy, electroplating and environmental protection and other fields.

FEATURES

- On-line & real-time monitoring
- Solid dielectric and PTFE liquid junction, not easy jam, maintenance free
- High accuracy
- Simple operation and high reliability
- External module is converted into a standard signal output
- Multiple output signal is optional
- Probe can be used under water
- Submerged mounting bracket is optional

ITEM	Specifications
Range	0-14PH
Supply	5VDC,12-24VDC
Accuracy	±0.3PH
Resolution	0.01PH
Response Time	<10s(in water)
Stability	≤0.02PH/24h
Output Signal	4-20mA,0-5V,0-2V,RS485
Operating Temperature	0-+80℃
Ingress Protection(Probe)	IP68
Storage	10-60℃@20%-90%RH
Dimension	Probe: Φ28*160mm Transmitting Module: ϕ29*100mm

PH VALUE	Specifications	PH VALUE	Specifications
<4.5	Strongly acidity	7.5-8.5	Faintly alkalinity
4.5-5.5	Acidity	8.5-9.5	Alkalinity
5.5-6.5	Faintly acidity	>9.5	Strongly alkalinity
6.5-7.5	Neutral		

Mounting bracket(length=1m):

Filter and protective cap:

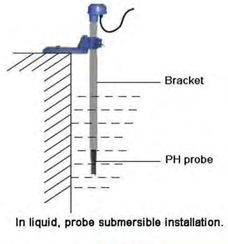

RK500-12 PH Sensor

FEATURES

- On-line & real-time monitoring
- Solid dielectric and PTFE liquid junction, not easy jam, maintenance free
- High accuracy
- Simple operation and high reliability
- Internal signal isolation, strong anti-interference
- Widely power supply(7-30VDC)
- Probe can be used under water(IP68)
- Submerged mounting bracket is optional

ITEM	Specification
Measurement Principle	Electrochemistry
Range	0-14PH
Supply	7-30VDC(power consumption<0.2W)
Accuracy	±0.05PH
Resolution	0.01PH
Temperature Compensation	Temperature compensation is optional
Response Time	<8s(flowing liquid), <14s(stationary liquid)
Stability	≤0.01PH/24h
Output Signal	4-20mA & RS485 at the same time
Calibration Cycle	Every 6 month(General water) Every 3 month or shorter(Seriously polluted water)
Operating Environment	0-+80℃(<0.6MPa), high pressure is customizable
Cable length	5m(default),customizable
Ingress Protection	IP68
Storage	10-60℃@20%-90%RH

PH VALUE	Specifications	PH VALUE	Specifications
<4.5	Strongly acidity	7.5-8.5	Faintly alkalinity
4.5-5.5	Acidity	8.5-9.5	Alkalinity
5.5-6.5	Faintly acidity	>9.5	Strongly alkalinity
6.5-7.5	Neutral		

RK500-22 Soil PH Sensor

FEATURES

- On-line & real-time monitoring
- Low impedance sensitive glass film
- RS485 and 4-20mA output at the same time, directly connected to computer and PLC systems
- Good repeatability and thermal stability
- Internal signal isolation, strong anti-interference
- Widely power supply
- IP68 Waterproof Standard
- Low drift, small size, fast response
- Easy installation, simple toperation
- Stable performance and long service life
- Aviation connector is optional to facilitate electrode replacement

ITEM	Specifications
Measurement Principle	Electrochemistry
Range	0-14PH
Supply	7-30VDC(power consumption<0.2W)
Accuracy	±0.05PH
Resolution	0.01PH
Response Time	<10s(soil moisture>30%)
Stability	≤0.01PH/24h
Output Signal	4-20mA & RS485 at the same time
Calibration Cycle	Every 6 month
Operating Environment	0-+80℃(<0.6MPa)
Cable Length	5m(default),customizable
Probe material	304SS
Ingress Protection	IP68
Storage	10-60℃@20%-90%RH

PH VALUE	Specifications	PH VALUE	Specifications
<4.5	Strongly acidity	7.5-8.5	Faintly alkalinity
4.5-5.5	Acidity	8.5-9.5	Alkalinity
5.5-6.5	Faintly acidity	>9.5	Strongly alkalinity
6.5-7.5	Neutral		

RK500-03 EC/Salinity Sensor

The probe of EC/Salinity sensor is made of graphite electrode that has the characteristics of stable performance,high sensitivity, wide application scope. EC sensor is of simple structure, with stable performance, easy for operation, used in the field monitoring of water & salt dynamics in soil.Therefore,it is an ideal observation instrument in the study of generation,evolution,and improvement utilization of saline soil.Also,it can be used in the anti-corrosion monitoring of underground oil,gas pipelines and other pipelines.The sensor can also be directly submerged in liquid,to measure its electrical conductivity.
Soil salinity sensor integrates graphite electrode and precision platinum resistance, to measure the soil salt through temperature compensation algorithm. After submerged into the soil, it can directly test salt content in the soil.

FEATURES

- On-line & real-time measurement
- With temperature compensation
- High accuracy
- Simple operation and high reliability
- Fast response
- Strong resistance to corrosion

ITEM	EC	Salinity
Range	0-20mS/cm	0-0.15mol/L
Supply	5VDC, 12-24VDC	
Accuracy	±2%	
Response Time	<1s	
Output Signal	4-20mA,0-2V,0-5V,RS485	
Electrode	Graphite	
Housing Material	ABS	
Operating Temperature	-30℃-+70℃	
Ingress Protection	IP68	
Storage	10-60℃@20%-90%RH	

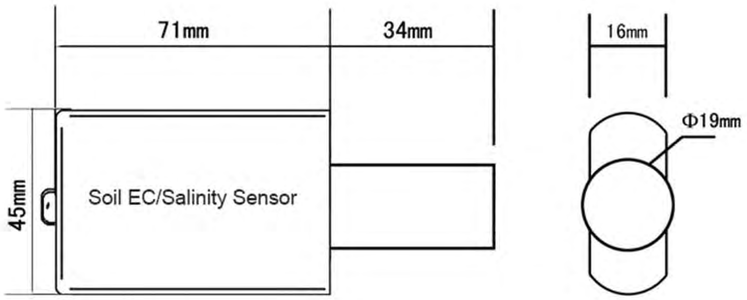

RK500-13 Online EC/Salinity Sensor

FEATURES

- On-line & real-time measurement
- Titanium alloy electrode & teflon lining
- High accuracy
- Electromagnetic isolation
- Strong resistance to corrosion
- Polarization resistance
- High temperature resistance
- Integral design without external transmitter

ITEM	EC	Salinity
Measuring medium	Liquid	
Principle	Frequency conversion method	
Range	0 ~ 500us/cm, 0 ~ 5000us/cm, 0 ~ 10000us/cm, 0 ~ 200000us/cm(any range of 0-300ms/cm can be customized, 1ms/cm = 1000us/cm)	0 ~ 100000ppm(mg/L) 1ppm(mg/L)=1000ppb(ug/L)=1000000ppt(ng/L)
Supply	7-30VDC(power consumption<0.2W)	
Accuracy	±1%	
Response Time	1s	
Output Signal	4-20mA & RS485 at the same time	
Electrode	Titanium alloy	
Temperature compensation		Automatic compensation
Drift	≤0.3%FS/24h	
Operating Temperature	-20℃-+80℃	
Probe material	316L or ABS(Strongly corrosive liquids)	
Ingress Protection	IP68	
Storage	10-60℃@20%-90%RH	
Cable length	Default:5m	

RK500-23 Soil EC/Salinity Sensor

FEATURES

- On-line & real-time measurement
- Titanium alloy electrode & teflon lining
- High accuracy
- Electromagnetic isolation
- Strong resistance to corrosion
- Polarization resistance
- Integral design without external transmitter
- RS485 and 4-20mA output

ITEM	EC	Salinity
Measuring medium	Soil or similar to soil	
Principle	Frequency conversion method	
Range	0 ~ 1000us/cm, 0 ~ 2000us/cm,0 ~ 5000us/cm, 0 ~ 10000us/cm,0 ~ 200ms/cm,(any range of 0-300ms/cm can be customized, 1ms/cm = 1000us/cm)	0 ~ 100000ppm(mg/L) 1ppm(mg/L)=1000ppb(ug/L)=1000000ppt(ng/L)
Supply	7-30VDC(power consumption<0.2W)	
Accuracy	±1%	
Response time	1s	
Output signal	4-20mA & RS485 at the same time	
Electrode	Titanium alloy	
Temperature compensation		Automatic compensation
Drift	≤0.3%FS/24h	
Operating temperature	-20℃-+80℃	
Probe material	316L	
Probe dimension	Φ13*175mm	
Ingress protection	IP68	
Storage	10-60℃@20%-90%RH	
Cable length	Default:5m	

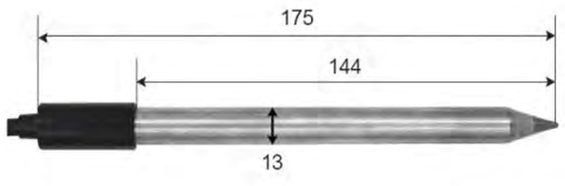

RK500-04 Dissolved Oxygen Sensor

The soil contains many substances such as organic acid, inorganic acid, alkali and salt, due to the different content of various substances, so the soil shows different ph value.Usually the pH in the range of 6.5-7.5 soil is called the neutral soil.RK500-02 pH sensors measure the pH value should be a good solution without professional wastewater instruments, complex operation, expensive and difficult to carry, can be for continuous measurement of soil, waste water pH value, suitable for agriculture, sewage treatment plant, chemical industry, printing and dyeing, paper making, pharmacy, electroplating and environmental protection and other fields.

FEATURES

- On-line & real-time monitoring
- With temperature compensation
- High accuracy
- Simple operation and high reliability
- No external module, a whole design
- Long service life
- Dissolved oxygen and temperature measurement at the same time(RS485)
- No requirement for liquid velocity
- Not affected by ions

ITEM	DO	Temperature
Range	0-20mg/L(ppm)	0-60℃
Accuracy	±0.5%FS	±0.5℃
Resolution	0.01mg/L	0.1℃
Supply	12VDC,24VDC	
Temperature compensation	0-60℃	
Output	RS485	
Measuring principle	Fluorescence	
Maintenance	Every 1year to replace fluorescent cap	
Response time	<60s	
Pressure resistance	0.3MPa	
Power consumption	<0.4W	
Operating temperature	0-+80℃	
Probe material	General: 316L For seawater: titanium alloy	
Dimension	Φ16*125mm	
Weight(probe)	0.7kg	
Ingress protection	IP68	
Storage	10-60℃@20%-90%RH	
Cable length	5m default, other length customizable	

RK500-06 ORP Sensor

Rk500-06 ORP sensor is simple and cost effective solution for a wide variety of wastewater and process applications. The all-in-one sensor provides simultaneous measurement of ORP and temperature. The rugged Ryton body is designed for easy installation into on-line via the 3/4 inch tapered threaded connections provided on both ends of the sensor. The wide body sensors (26 mm diameter) hold four separate elements in one unbreakable Ryton body, large volume gelled electrolyte and the double junction reference system slows down depletion and poisoning extending the life time.

FEATURES

- On-line & real-time monitoring
- Simultaneous ORP and temperature measurement
- Integral temperature element for enhanced accuracy
- Double junction and long diffusion paths for reference pollution resistance
- Extended life time by large volume of polyelectrolyte and porous PTFE diaphragm
- Solid Glass/Platinum electrode for solution ground or ORP measurement
- Simple maintenance by comprehensive design
- Submerged mounting bracket is optional

ITEM	Specification
Measurement Principle	Electrochemical(platinum ring)
Range	-1500mV-+1500mV
Resolution	0.1mV
Accuracy	±0.5mV
Supply	7-30VDC
Response Time	5s
Output	4-20mA & RS485 at the same time
Operating Environment	-10-+80℃(<0.6MPa)
Stability	≤1%/year
Maintenance	Every 1 months to clean the electrode ,every 6 months calibrated
Power Consumption	<0.4W
Ingress Protection	IP68
Storage	10-60℃@20%-90%RH
Cable Length	5m default,,customizable

MOUNTING BRACKET (LENGTH=1M) IS OPTIONAL

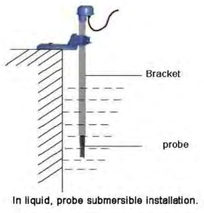

RK500-07 Turbidity(SS) Sensor

Rk500-07 Turbidity sensor is an instrument which uses optical principle to measure the degree of turbidity of water. Turbidity is caused by suspended particles in water. The suspended particles reflect the incident light. Usually, the scattered light in the direction of 90°is used as the test signal, so the unit tested is called NTU. This method is suitable for testing low to medium range, ranging from 0.01 to 4000FNU. According to EN27027 and ISO7027 standards, infrared light of 860 nm is used as light source, which can not be disturbed by the chromaticity of samples.

FEATURES

- On-line & real-time monitoring
- With temperature compensation
- High accuracy
- Easy operation and high reliability
- No external module, a whole design
- Multiple output signal is optional

ITEM	Specification
Range	0-4000NTU
Accuracy	±1%FS
Resolution	0.1%
Supply	12-24VDC
Temperature Compensation	0-60℃
Output	RS485,4-20mA
Pressure Resistance	<3bar
Measuring Principle	optical
Power Consumption	<10W
Operating Temperature	0-+80℃
Dimension	Φ45*135mm
Main Material	316L
Ingress Protection	IP68
Storage	10-60℃@20%-90%RH
Cable length	5m default

RK500-14 Nitrite Sensor

RK500-14 Nitrite Sensor is a sensor that adopts electrochemical principle to rapidly measure the content of nitrite, which is toxic and carcinogenic. As a pollutant widely existing in natural environment and human life, rapid and sensitive detection of nitrite has become very necessary and of great significance.RK500-14 is widely used in experimental environmental water quality measurement, industrial water plant water quality measurement, agricultural environment measurement, aquaculture water quality measurement, petrochemical measurement, video processing measurement.

FEATURES

- Automatic temperature compensation
- POM housing
- Easy operation and high reliability
- No external module, a whole design
- NO2- and temperature measurement at the same time
- Immersion in water or pipe installation

ITEM	NO_2^-	Temperature
Range	0.1-1000mg/L	0-50℃
Accuracy	±2.5%	±0.5℃
Resolution	1mg/L	0.1℃
Supply	12-24VDC	
Temperature Compensation	NTC10K	
Output	RS485	
Pressure Resistance	<0.1MPa	
Power Consumption	<0.4W	
Operating Temperature	0-+40℃	
Probe Material	POM	
Ingress Protection	IP68	
Cable Length	10m default,other length optional	
Storage	10-60℃@20%-90%RH	

RK500-15 Ammonium ion(NH_4+) Sensor

FEATURES

- High performance sensitive film
- Automatic temperature compensation
- PVC and POM housing
- Simple operation and high reliability
- No external module, integrid design
- NH4+ and temperature measurement at the same time
- Immersion in water or pipe installation

ITEM	NH_4+(concentration)(4-10PH)	Temperature
Range	0-100mg/L	0-40℃
Accuracy	±10%FS	±0.3℃
Resolution	0.1mg/L	0.1℃
Supply	12-24VDC	
Temperature Compensation	Automatic temperature compensation	
Output	RS485	
Pressure Resistance	<0.1MPa	
Power Consumption	<0.4W	
Operating Temperature	0-+40℃	
Probe Material	PVC+POM	
Ingress Protection	IP68	
Cable Length	5m default,other length optional	
Storage	10-60℃@20%-90%RH	

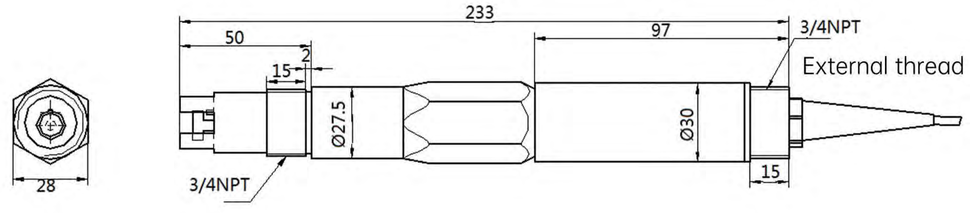

RK500-18 TDS sensor

The probe of the TDS sensor is made of stainless steel and has the characteristics of stable performance, high sensitivity and wide application range. The TDS sensor is simple in structure, stable in performance, easy to operate, and is used for on-site monitoring of liquid water and salt dynamics. In addition, it can also be used in ordinary water treatment, tap water, surface water, industrial water, reverse osmosis, seawater desalination, circulating water and other water treatment equipment sockets or flow cell installation to measure its conductivity.

FEATURES

- Real-time measurement
- With temperature compensation
- High accuracy
- Simple operation and high reliability
- Fast response
- Strong in corrosion resistance

ITEM	Specification
Range	0 ~ 2000ppm
Supply	7-30VDC
Accuracy	±1%
Response time	<1s
Output Signal	4-20mA & RS485
Pressure resistance range	0-4bar
Principle	Frequency conversion method
Temperature range	0-60℃
Installation interface	G3/4
Ingress Protection	IP68
Probe material	316L or ABS(Strongly corrosive liquids)
Storage	10-60℃@20%-90%RH
Weight	0.5kg
Cable length	Default:5m

RK500-20 Total Soluble Solid Sensor

RK500-20 Total Soluble Solid Sensor is designed and manufactured using the principle of scattered light suspended matter measurement method. When a beam of light enters the water sample, the suspended matter in the water sample scatters the light. By measuring the intensity of the scattered light perpendicular to the incident light and comparing it with the internal calibration value, the suspended matter in the water sample is calculated , The final value is output after linearization processing

FEATURES

- IP68 protection, water depth within 20 meters
- Built-in temperature sensor
- Support RS-485
- Modbus/RTU protocol
- Stable and easy to maintain

ITEM	Specification
Range	0 ~ 2000mg/L
Temperature Range	0-50℃
Accuracy	±5%
Resolution	0.1NTU，0.1℃
Power	12-24VDC
Power Consumption	<0.5W
Output	RS485(Modbus-RTU)
Main Material	POM
Protection Class	IP68
Deepest Depth	20m underwater
Cable Length	5 m(default), customizable

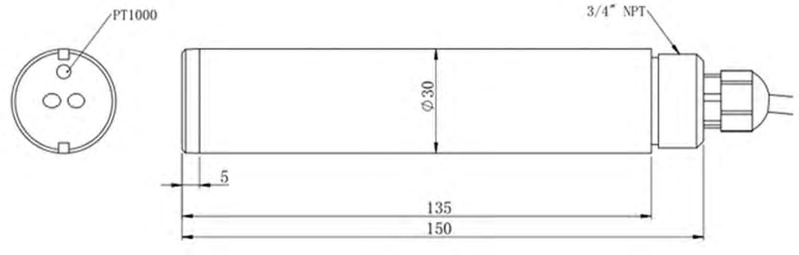

RK500-25 COD Sensor

Many organics dissolved in water can absorb UV light. Therefore, the total amount of dissolved organic pollutants in water can be accurately measured by measuring the absorption of these organic compounds to UV light of 254 nm wavelength. The COD sensor adopts two light sources, one is 254nm ultraviolet light, the other is 550nm green light reference light, which can automatically compensate the attenuation of the optical path and eliminate the interference of impurities in the granular suspension to a certain extent, so as to achieve more stable and reliable measurement.

FEATURES

- No reagent, no pollution, more economic and environmental protection
- Small size, more convenient installation, online water quality monitoring
- Automatic compensation for turbidity interference
- With cleaning brush, automatic cleaning, can prevent biological adhesion
- Small drift, fast response and more accurate measurement
- Excellent stability
- Maintenance free, long service life and low cost
- RS-485 interface, Modbus / RTU protocol
- Low power design, anti-interference design

ITEM	Specification
Measurement Principle	Dual wavelength ultraviolet absorption method
Range	COD: 0-370mg / L equiv. KHP Turbidity:range 0-100NTU
Accuracy	COD: ± 5% F.S Turbidity:± 5% F.S
Resolution	COD: 0.1mg/l Turbidity:0.1NTU
Supply	10-30VDC(power consumption<0.5W)
Response Time	<10s
Output Signal	RS485
Operating Environment	0-+45℃(<0.4MPa)
Cable Length	5m(default),customizable
Probe Material	Titanium alloy and 316L stainless steel
Ingress Protection	IP68
Storage	10-60℃@20%-90%RH

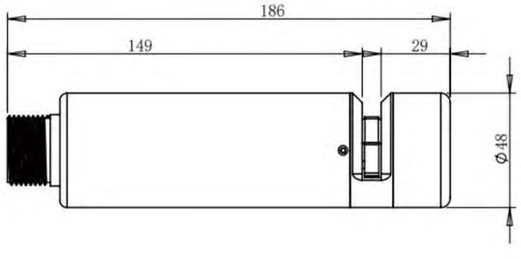

RK500-55 Non contact road condition sensor

RK500-55 is a non-contact road surface state detector, thanks to remote sensing technology it's taken, it can not only avoid damage to the road,but also traffic interference during its installation. Multispectral measurement technology enables accurate detection of thickness of ice,snow,water on surface of the road.
RK500-55 detector is ideal choice for road conditions where installation of embedded pavement sensor is inconvenient or inapplicable. Remote installation, means that there is no need to slot-cut surface or shut down the road, its installation is safe and convenient. It's almost free of maintenance and ideal choice for road meteorological systems. It can be installed on existing weather stations or on other buildings which has unobstructed view to pavement.
The RK500-55 detector is installed in a robust durable housing to ensure its stable working and providing accurate data during bad weather.

FEATURES

- Remote monitoring water,ice and snow
- Remote surface state sensing
- Measure amount of water, ice, and level of grip
- No embedded installation
- Anti-corrosion
- Infrared detection, distance up to 15.5 meters
- Easy for installation with shutting down the road
- Robust structure, 7*24 hours monitoring

ITEM	Specification
Measuring distance	2-15m
Measuring radius	25.4 cm
Angle	30-90°
Power Supply	220VAC,24VDC
Power Consumption	4W
Operating Temperature	-40 ºC to +70 ºC
Operating Humidity	0 to 100%
Measuring Range	Water:0.00—10mm Ice:0.00—10mm Snow:0.00—10mm Level of Grip:0.00—1 Road surface temperature:-40ºC to +60ºC (optional)
Accuracy	0.01mm
Lens Contamination Detection	Automatic lens contamination level detection and compensation
Road Surface	Concrete,asphalt pavement
Communication Interface	RS485,RS232
MTTF	1.5 x 1000000 hours
Safety	Infrared measuring technology, no radiation

RK510-01 Soil Moisture Sensor

RK510-01 is a high accuracy, high sensitivity of soil moisture measuring instrument.The product on the principle of electromagnetic pulse (FDR:Frequency Domain Reflectometry) to measure the dielectric constant of the soil, stainless steel probe is inserted into the soil surface or soil profile to quickly online measurement of soil volumetric moisture content, the method is the most popular method of soil moisture measurement.It can be used permanently embedded in the soil.Soil moisture sensor can be widely applied to the soil moisture monitoring, water-saving irrigation, greenhouse control, fine agriculture, hydrology and meteorology, and other fields, road monitoring.

FEATURES

- Four 316L needle probe
- High stability
- High accuracy
- Fast response
- Easy Installation
- Not affected by chemical fertilizer or metal ions

ITEM	Specification
Range(m3/m3)	0-100%,0-50%,0-30%,
Accuracy	±2%(0-50%)
Output Signal	4-20mA ,0-5V,0-2V,RS485 optional
Response Time	<1s
Supply	5V,12-24VDC
Effective measurement area	With the center of the probe diameter is 70mm, high 70mm cylinder
Housing	ABS
Dimensions	Ø50*208mm(probe:Ø4*78mm)
Operating Temperature	-30℃-+70℃
Ingress Protection	IP67
Storage	10-60℃@20%-90%RH
Probe material	316L stainless steel

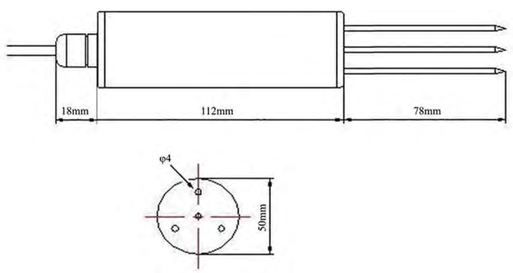

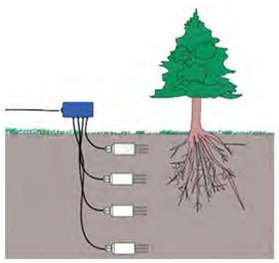

RK520-01 Soil Moisture & Temperature Sensor

RK520-01 Soil Moisture & Temperature Sensor integrates integrate the moisture and temperature measurement. The stainless steel probe is inserted into soil surface or soil profile to test soil moisture and temperature quickly. Moisture measurement part is designed on the basis of the principle of FDR, by measuring the dielectric constant of the soil in order to measure the volume of the soil moisture content, temperature part adopts precision platinum resistance element, the product built-in drift calibration and temperature compensation circuit, can adapt to most applications.The probe can be permanently embedded underground and be connected to a data logger for unlimited testing.

FEATURES

- High precision
- Fast response
- Not affeced by soil properties
- Directly buried in soil
- Widely used

ITEM	Moisture	Temperature
Range	0-100% (m3/m3)	-30℃-+70℃
Accuracy	±3%(0-50%)	±0.3℃
Output Signal	4-20mA ,0-5V,0-2V,RS485 optional	
Response Time	<1s	
Supply	5VDC,12-24VDC	
Effective measurement area	With the center of the probe diameter is 70mm, high 70mm cylinder	
Housing	ABS	
Dimensions	71*45*16mm(probe:2* Ø3*55mm,1*Ø4*55mm)	
Operating Temperature	-40℃-+80℃	
Ingress Protection	IP68	
Storage	10-60℃@20%-90%RH	
Probe material	316L stainless steel	

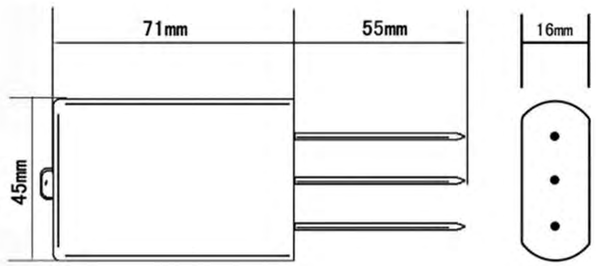

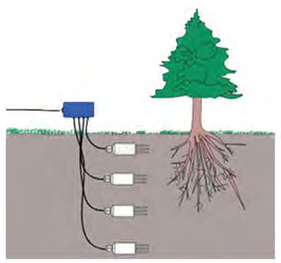

RK520-02 Soil Moisture Temperature & EC Sensor

RK520-02 Soil Moisture, Temperature & EC Sensor is integrated the moisture, temperature & EC measurement.The stainless steel probe is inserted into soil surface or soil profile to test quickly. The product is with temperature compensation to ensure the accuracy of measurement. The probe can be permanently embedded underground and be connected to a data logger for unlimited testing.

FEATURES

- High precision
- Fast response
- Suitable for saline-alkali soil
- Allows long-term immersion
- Not affected by soil properties
- Directly buried in soil
- Widely used

ITEM	Moisture	Temperature	EC
Range	0-100% (m3/m3)	-30℃-+70℃	0-10mS/cm
Accuracy	±2%(0-50%) ±3%(51-100%)	±0.5℃	±3%FS
Output Signal	RS485,0-2V		
Response Time	<1s		
Supply	5VDC, 12-24VDC		
Effective measurement area	With the center of the probe diameter is 70mm, high 70mm cylinder		
Housing	ABS		
Dimensions	45*15*145mm(probe:3* Ø3*70mm)		
Operating Temperature	-40℃-+80℃		
Ingress Protection	IP68		
Storage	10-60℃@20%-90%RH		
Probe material	316L stainless steel		

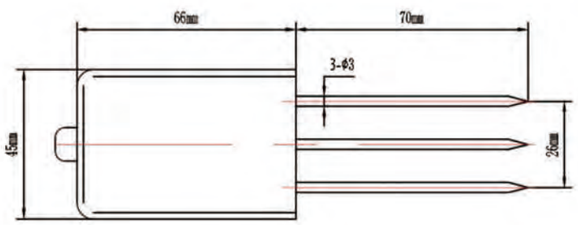

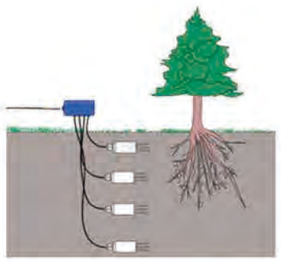

RK520-04 Multilayer Conduit Type Soil Temperature and Humidity Sensor

The soil temperature and humidity sensor based on FDR (Frequency Domain Reflection) principle, using the FDR layered tube type soil moisture measuring method, according to the frequency change of the electromagnetic wave emitted by the detector in different dielectric coefficient material, calculated from the measured soil moisture. Capable of simultaneous measurement of different depth of soil moisture and soil temperature. This series of products can be widely used in drought monitoring, soil research, intelligent irrigation, agricultural production prediction and landslides.

FEATURES

- High precision
- Fast response
- Not affeced by soil properties
- Directly buried in soil
- Widely used

ITEM	Moisture		Temperature	
Range	0-100% (m3/m3)		-20℃-+60℃	
Accuracy	±3%(0-50%)		±0.5℃	
Output Signal	RS485			
Measurement level	3	4	8	10
Dimensions	Ø63*730mm	Ø63*865mm	Ø63*1200mm	Ø63*1520mm
Response Time	<1s			
Supply	12-24VDC			
Power consumption	<40mA @24VDC			
MTTF	2500h			
Housing	PVC			
Operating Temperature	-40℃-+80℃			
Ingress Protection	IP68(underground)			
Storage	10-60℃@20%-90%RH			
MEASUREMENT LEVEL	Depth of measurement			
3	10cm-20cm-40cm			
4	10cm-20cm-40cm-60cm			
8	10cm-20cm-40cm-60cm-80cm			
10	10cm-20cm-30cm-40cm-50cm-60cm-70cm-80cm-90cm-100cm			

RK600-07 Data Logger

RK600-07 Data Logger with data acquisition, storage, transmission and management, and other functions, is the core component of automatic weather station, which can connect 32 at the same time, has the settings and color LCD display, can communication with sever or cloud via cable or wireless connection, provide communication protocol, convenient for secondary development.

FEATURES

- Local real-time display
- Multiple sensor interface
- Large storage
- Multiple communication interfaces
- Wireless optional
- Free app and PC remote monitoring software
- Data cloud platform
- Self-contained clock chip
- Solar power supply optional
- Custom display interface

ITEM	RK600-07A	RK600-07B
Display	7" color touch screen with backlight	7" color touch screen with backlight
OS	/	Android4.0.3
Screen sleep	Support	Support
Backlight adjustable	Support	Support
Communication status indication Internal storage	Support	Support
Internal storage	64M(Data stored once every hour for 6 years once every 10 minutes for 1 year, and once every minute for 3 months.)	64M(Data stored once every hour for 6 years, once every 10 minutes for 1 year, and once every minute for 3 months.)
RIKA cloud	Support，Need GPRS/2G/3G/4G Module	Not support
User cloud	Support，Need GPRS/2G/3G/4G Module	Not support
API	Support，Need GPRS/2G/3G/4G Module	Not support
Remote monitoring	Not support	Support Windows,Mac & Android
Video & photo	Via RIKA cloud	Not support
Sensor connection	Waterproof connector	Waterproof connector
Communication interface	RS485 RJ45 Ethernet(optional) GPRS/2G/3G/4G(optional) Lora(optional) Zigbee(optional)	RS485,Ethernet,GPRS/2G/3G/4G,WIFI / / Lora(optional) Zigbee(optional)

ITEM	RK600-07A	RK600-07B
Communication protocol	Modbus-Rtu	Modbus-Rtu,Modbus-Tcp
	Modbus-Tcp(with Ethernet module)	/
Supply	Solar power,DC12-24V,AC100-240V	Solar power,DC12-24V,AC100-240V
Measurement parameters	32 max.,support 16 parameters upload to cloud platform	32 max.
Recording interval	1-240min settable	1-240min settable
U_disk download	Support	Support
Relay output	customized	customized
Average consumption	<3.5W	<3.5W
CPU	ARM Cortex-A8（600MHZ)	ARM Cortex-A8（720MHZ)
ESD	Class 4，±8kV	Class 4，±8kV
Operation temperature	-40-+75℃	-40-+75℃
Shock	10-25Hz(X,Y,Z 2g@30min)	10-25Hz(X,Y,Z 2g@30min)
FCC	Class A	Class A
CE	EN55022 & EN55024	EN55022 & EN55024
Protection box	400*500*200mm,support solar power system	400*500*200mm,support solar power system
IP(with protection box)	IP55	IP55

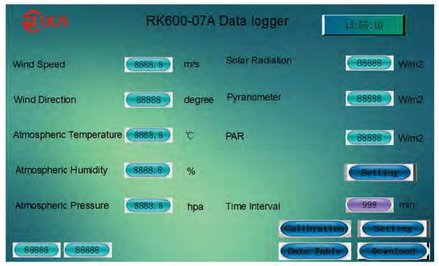

Main Interface

Data Table Interface

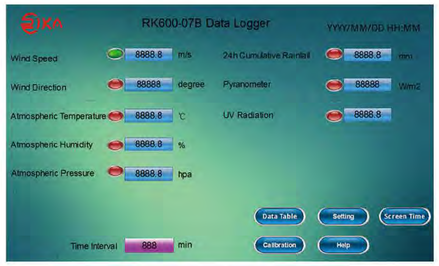

Main Interface

Setting Interface

Data Table Interface

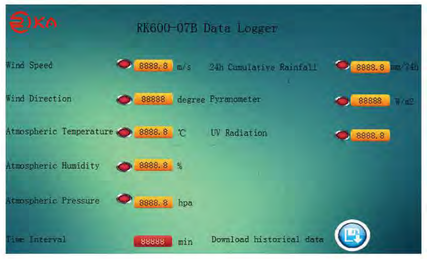

PC & APP Remote Interface

RK600-08 Data Logger of Automatic Weather Station

RK600-08 Data Logger with data acquisition, storage, transmission and management, and other functions, is the core component of automatic weather station, which can connect 32 parameter at the same time, has the settings and color LCD display, can communication with PC via cable or wireless connection, provide communication protocol, convenient for secondary development.

FEATURES

- Real-time display
- Multiple sensor interface
- Large storage
- Types of communication interface
- Udisk external storage optional
- Wireless optional
- Self-contained clock chip
- Solar power supply optional
- HMI phone app & PC Software
- Data cloud platform
- Custom display interface
- Relay and alarm output

ITEM	Details
LCD	4.3" color touch screen
Storage type	Internal storage or external U_disk is optional
Internal storage	65000 pieces of data can be stored.
Data interface	RS232 or RS485(customized)
Communication mode (Select communication mode)	Ethernet(add RS232 to ethernet converter); GPRS(add RS232 to GPRS converter),data flow consumption: <100MB/month WIFI(add RS232 to WIFI converter)
Communication protocol	MODBUS-RTU(Open communication protocol, the user can convenient for secondary development)
Supply	12VDC with 100-240VAC adapter, solar power supply system optional
Record interval	1min-240min adjustable
Measurement parameters	32 Max.
Power consumption	<4W
Operating temperature	-40-+75℃
Internal protection	Built-in power isolation protection
HMI processor	ARM RISC 528MHz
Data cloud platform	Upload data to cloud platform through GPRS module or WiFi module.
Relay and alarm output	Customized alarm and relay control output

RK700-01 Digital Dual-Axis Inclination Sensor

RK700-01 is a new generation of digital small-volume micro-electro-mechanical tilt sensor. It has a dual-channel gravitational tilt unit, which converts the static gravitational acceleration into the tilt change, so that the tilt and pitch angle of the sensor relative to the horizontal plane can be measured. The product adopts secondary correction technology, which has high measurement accuracy.
This product uses non-contact measurement of the original quantity, can output the current attitude angle in real time, and is simple to use. It is an ideal choice for industrial automation control and platform attitude measurement. It has strong ability to resist external electromagnetic interference and can adapt to long-term work in harsh industrial environment. This product is mainly suitable for dynamic measurement of static and slow changes, but not for dynamic measurement of rapid changes.

FEATURES

- Dual-Axis Inclinometer
- Long-term stability 0.2°
- Strong corrosion resistant ability
- Highly anti-vibration performance >3500g
- IP67 protection class
- Resolution: 0.1°
- Output RS232/RS485/TTL (optional)

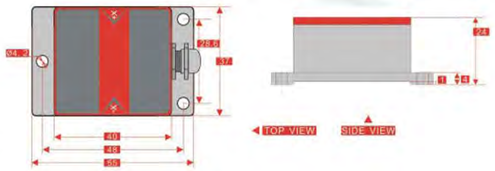

ITEM	Specification
Power supply	5VDC(4.5-7VDC),9-36VDC is optional
Measuring range	±10°
Measuring axis	X,Y
Resolution	0.1°
Absolute	0.1°
Zero temperature	±0.008°/℃
Sensitivity temperature	≤150ppm/℃
Power on time	500mS
Response time	50mS
Output signal	RS232/RS485/TTL is optional
Working current	40mA typ.
Operating Temperature	-40℃-+85℃
Storage Condition	10℃-60℃@20%-90%RH
EMC	According to EN61000
MTBF	≥45000 hours
Insulation Resistance	≥100MΩ
Shockproof	100g@11ms、3Times/Axis(half sine)
Anti-vibration	10grms、10～1000Hz
Ingress Protection	IP67
Cables	Shielded cables 4*0.4mm2 , length=1m default
Housing material	Aluminium alloy
Installation	3*M4 screws
Weight	90g(without cable)

RK900-01 Automatic Weather Station

RK900-01 Automatic Weather Station is used for atmospheric temperature, relative humidity, atmospheric pressure,wind speed & direction,solar radiation,light,rainfall,soil temperature and humidity parameters measurement.The station consists of various types of sensors, LCD screen, meteorological data collector, chassis, support and other parts.It can be widely used in meteorology, hydrology, agriculture, forestry, scientific research and other fields.

FEATURES

- High accuracy
- Strong resistance to harsh environment
- Strong corrosion resistant ability
- Automatic storage and backup
- Convenient data download
- All-metal construction of bracket
- Solar power supply optional
- Free PC software

PARTS	Details	Note
Data logger	Meteorological data collection, display, storage and communications	
Sensors & cable	Wind speed sensor, wind direction sensor, atmospheric temperature, atmospheric humidity, atmospheric pressure, rainfall, solar radiation, soil temperature, soil moisture,etc. (Optional according to user's requirements)	Attached
Meteorological monitoring software	Use to real-time display, analysis and storage data on the PC	
Multi-plate radiation shield	Used to install the atmospheric temperature, atmospheric humidity and atmospheric pressure sensors	
Tripod & accessories	Height: 2.5m typ.,304SS or Height: 10m(4m+3m+3m) steel with coating is optional other height is optional	
Protective box	Used to install data logger,solar charge controller and battery, stainless steel or steel with coating	
110VAC/220VAC adapter	Optional when using AC power supply	
RS232 cable	2m	
RS485 cable	2m	
USB to RS232 converter	Used to connect PC without RS232 serial port	
RS232-RS485 converter	Signal Conversion for RS485 and RS232	
U disk	Used for data storage	optional
GPRS module	Used for wireless data transmission, need to match with the local mobile communication network	optional
WIFI module	Used for wireless data transmission,need for wireless networking	optional
Ethernet module	Used for wireless data transmission,need for cable network	optional
LED screen	Size and display content can be customized	optional
Solar power supply system	Include photovoltaic panels(30W), solar charge controller, 25AH battery(Can't be transported by air. Suggest users to bring their own)	optional
Lightning protection device	Contain the lightning rod, connecting wires and grounding angle steel	optional
Windbreak wire	Used for fixing 10m support rod	
Base fixed steel cage	Used for fixing 10m support rod	

TYPICAL APPLICATION &
TECHNICAL SPECIFICATION

General weather station

MEASURE ITEM	Measure range	Resolution	Accuracy
Wind speed	0-45m/s	0.1m/s	±(0.3±0.03V)m/s
Wind direction	0-360°	1°	±3°
Atmospheric temperature	-50-+100℃	0.1℃	±0.5℃
Atmospheric humidity	0-100%RH	0.1%RH	±3%
Atmospheric pressure	10-1100hPa	0.1hpa	±0.3hPa
Rainfall	0-8mm/min	0.2mm	±4%
Solar radiation	0-2000W/m2	1W/m2	±5%

Photovoltaic power generation weather station

MEASURE ITEM	Measure range	Resolution	Accuracy
Wind speed	0-45m/s	0.1m/s	±(0.3±0.03V)m/s
Wind direction	0-360°	1°	±3°
Atmospheric temperature	-50-+100℃	0.1℃	±0.5℃
Atmospheric humidity	0-100%RH	0.1%RH	±3%
Atmospheric pressure	10-1100hPa	0.1hpa	±0.3hPa
Photovoltaic panels temperature sensor	-50-+100℃	0.1℃	±0.5℃
Total solar radiation	0-2000W/m2	1W/m2	±3%
Rainfall(optional)	0-8mm/min	0.2mm	±4%
Hall current sensor(optional)	0-500V	1V	±0.5%
Hall voltage sensor(optional)	0-150A	0.1A	±0.5%

Agricultural weather station

MEASURE ITEM	Measure range	Resolution	Accuracy
Wind speed	0-45m/s	0.1m/s	±(0.3±0.03V)m/s
Wind direction	0-360°	1°	±3°
Atmospheric temperature	-50-+100℃	0.1℃	±0.5℃
Atmospheric humidity	0-100%RH	0.1%RH	±3%
Atmospheric pressure	10-1100hPa	0.1hpa	±0.3hPa
Rainfall	0-8mm/min	0.2mm	±4%
Uv radiation	0-200W/m2	1W/m2	±5%
Ground temperature	-50-+80℃	0.1℃	±0.5℃

Scenic area weather station

MEASURE ITEM	Measure range	Resolution	Accuracy
Wind speed	0-45m/s	0.1m/s	±(0.3±0.03V)m/s
Wind direction	0-360°	1°	±3°
Atmospheric temperature	-50-+100℃	0.1℃	±0.5℃
Atmospheric humidity	0-100%RH	0.1%RH	±3%
Atmospheric pressure	10-1100hPa	0.1hpa	±0.3hPa
Solar radiation	0-2000W/m2	1W/m2	±5%
PAR sensor	0-2500μ*mol*m2*s	1μ*mol*m2*s	±1%
Rainfall	0-8mm/min	0.2mm	±4%
Soil temperature	-50-+80℃	0.1℃	±0.5℃
Soil moisture	0-100%	1%	±3%
CO2(optional)	0-5000ppm	1ppm	±3%
Soil PH(optional)	0-14PH	0.1PH	±0.1PH
Soil salinity(optional)	0-15000mg/L	1mg/L	±5%
Soil EC(optional)	0-20mS/cm	0.1mS/cm	±5%

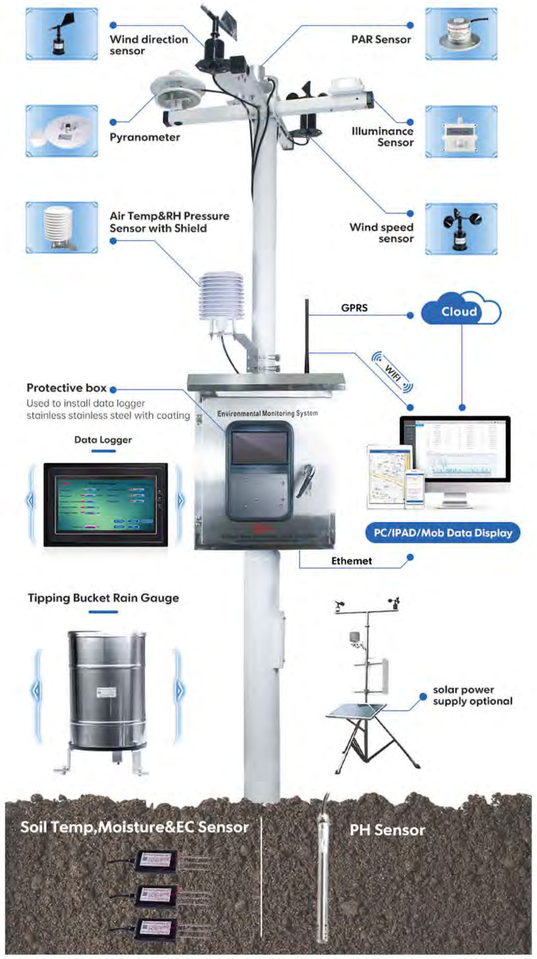

Greenhouse comprehensive monitoring station

MEASURE ITEM	Measure range	Resolution	Accuracy
Atmospheric temperature	-50-+100℃	0.1℃	±0.5℃
Atmospheric humidity	0-100%RH	0.1%RH	±3%
Atmospheric pressure	10-1100hPa	0.1hpa	±0.3hPa
CO2	0-5000ppm	1ppm	±3%
Illuminance	0-200000lux	1lux	±7%
Soil temperature	-50-+80℃	0.1℃	±0.5℃
Soil moisture	0-100%	1%	±3%
Solar radiation(optional)	0-2000W/m2	1W/m2	±5%
PAR sensor(optional)	0-250μ*mol*m2*s	1μ*mol*m2*s	±1%
Soil PH(optional)	0-14PH	0.1PH	±0.1PH
Soil salinity(optional)	0-15000mg/L	1mg/L	±5%
Soil EC(optional)	0-20mS/cm	0.01mS/cm	±5%

Notice:
1.The measurement items can be increased or deleted in the table;
2.Measured data is automatically recorded and stored for download analysis;
3.If there are other functional requirements, we can provide customized solutions.

RK900-03 Portable Weather Station

RK900-03 Portable Weather Station is a high-integrated mini weather station of micro-power consumption, equipped with a lightweight telescopic tripod for rapid installation. Its functions as : short-term meteorological observations; chronically continuously monitoring small weather station and adaptable for mobile real-time data collection. Five sensors are included, such as wind direction, wind speed, barometric pressure, temperature, humidity sensor (others can be customized). The test data can be transmitted to a fixed meteorological data center or vehicle mobile center system via RS232, RS485, USB or GPRS wireless communications.

FEATURES

- High accuracy
- Strong resistance to harsh environment
- Low power consumption
- Aluminum alloy frame, one-hand carry, rapid set up in 10s
- Additional sensors can be customized
- Being equipped with lithium battery and various power supply interfaces
- Variety of communication mode for option

MEASURE ITEM	Measure range	Resolution	Accuracy
Wind speed	0-45m/s	0.1m/s	± (0.3±0.03V) m/s
Wind direction	0-360º	1°	±3°
Atmospheric temperature	-50-+100℃	0.1℃	±0.5℃
Atmospheric humidity	0-100%RH	0.1%RH	±3%
Atmospheric pressure	10-1100hPa	0.1hpa	±0.3hPa

ITEM	Specification
Storage capacity	4M,if stored hourly, you can store data for one month.
Meteorological monitoring software(for free)	Use to real-time display, analysis and storage data on the PC
Communication mode	Default R232,RS485 & GPRS is optional
Supply	Recharged 4.8 AH lithium battery or ac adapter(AC100-240V) or 12DC
Power consumption	<1W
Electronic compass(optional)	With electronic compass when installation does not need to manually to the north
Portable aluminum alloy instrument box(optional)	600*200*500mm
Installation	The AWS can complete the installation within 1 minute
Ingress protection	IP65
Operating temperature	-40℃-+70℃
Dimension	1375 mm(Shrinkage at 1135 mm,Height can be customized.)
Weight(unpacked)	5kg

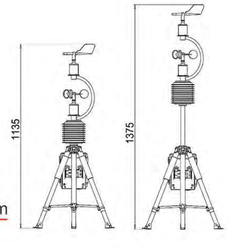

RK900-09 Miniature Ultrasonic Automatic Weather Instrument

RK900-09 miniature ultrasonic weather station is a fully digital detection, high-precision sensor, which is integrated by the principle of ultrasonic wind speed and direction sensor, high-precision digital temperature, humidity, pressure sensor, can accurately and quickly detect wind speed, wind direction, atmospheric temperature, atmospheric humidity and Atmospheric pressure, built-in signal processing unit can output corresponding signals according to user needs, high-strength structure design can work reliably in harsh climate environment, can be widely used in meteorology, ocean, environment, airport, port, laboratory, industry, agriculture and transportation, etc.

FEATURES

- High accuracy,fast response
- Easy to install, all-weather measurement
- RS485 output
- High-strength structural design

MEASURE ITEM	Principle	Range	Resolution	Accuracy
Wind speed	Ultrasonic	0-40m/s	0.1m/s	± (0.3±0.03V) m/s
Wind direction	Ultrasonic	0-359º	1°	±3°
Atmospheric temperature	MEMS	-40-+100℃	0.1℃	±0.5℃
Atmospheric humidity	MEMS	0-100%RH	0.1%RH	±3%
Atmospheric pressure	MEMS	10-1100hPa	0.1hpa	±0.3hPa

ITEM	Specification
Supply	12-24VDC
Output	RS485
Communication Protocol	Modbus-rtu
Power consumption	0.6W
Operating temperature	-40-+80℃
IP Rating	IP65
Main material	ABS+ Aluminum alloy

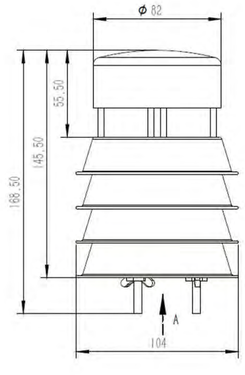

RK900-10 Ultrasonic Automatic Weather Instrument

RK900-10 automatic weather instrument is simultaneously measure the atmospheric temperature, atmospheric humidity, air pressure, wind speed, wind direction, solar radiation, Illuminance/UV, dust concentration and precipitation. Temperature, humidity and air pressure sensor is placed within the radiation shield. Wind speed and direction of ultrasonic principle.24G radar detection on rainfall, which can quickly detect rainfall and rainfall intensity. Internal GPS global positioning module and electronic compass can be mounted to the system to give a good indication of latitude and longitude and relative speed, which can calculate the real and virtual wind speed and direction, and is especially suitable for installation on motion vector, such as special vehicles or vessels, etc.

FEATURES

- High accuracy, fast response
- Easy to install, all-weather measurement
- RS485/RS232/SDI-12 output
- No moving parts, maintenance free
- Built-in heating device to ensure the normal work in cold climate
- Use radar measurement of precipitation, accurately reflect the rainfall and start-stop moment
- Can be added the electronic compass, GPS and BDS global positioning module

MEASURE ITEM		Principle	Range	Resolution	Accuracy
Wind speed		Ultrasonic	0-60m/s	0.01m/s	±3%
Wind direction		Ultrasonic	0-360º	1°	±3°
Atmospheric temperature		MEMS	-40-+80℃	0.1℃	±0.3℃
Atmospheric humidity		MEMS	0-100%RH	0.1%RH	±3%
Atmospheric pressure		MEMS	150-1100hPa	0.1hpa	±1hPa
Precipitation(Rain/Hail/Snow)		Radar	0-4mm/min	0.01mm	±0.4mm
Solar radiation		Silicon-cell	0-1750W/m2	1W/m2	±5%
Illuminance	optional	Silicon-cell	0-20klux	1lux	±5%
UV	optional	Silicon-cell	100-200kμW/cm2	1μW/cm2	±10%
Dust concentration(PM2.5,PM10)		Photoelectric scattering	0-2000μg/m3	1μg/m3	±4%

ITEM	Specification
Supply	12-24VDC
Output	RS485,RS232,SDI-12
Communication Protocol	Modbus-rtu(default),NMEA-0183,SDI-12
Data update cycle	1s(default),other optional
Power consumption	<2W,auto-heating power: 6W
Operating temperature	-40-+80℃
EMC	EN61000-6-3 , EN61000-3-3 EN61000-3-2 , EN61000-6-1
IP Rating	IP66
Main material	ABS+ Aluminum alloy

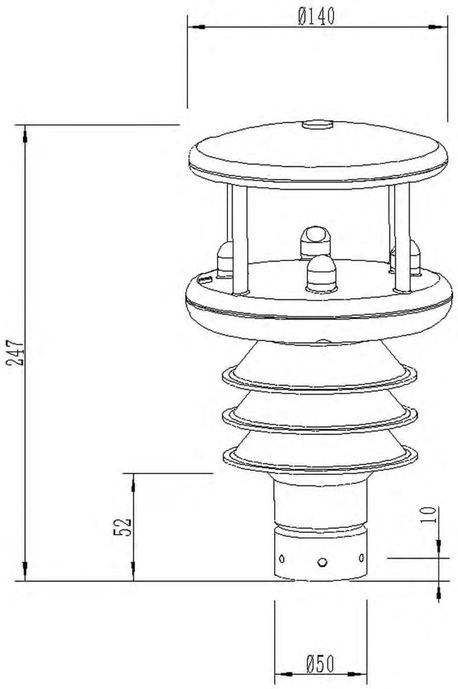

RKL-01 Submersible Liquid Level Transmitter

RKL-01 Submersible Liquid Level Transmitter is with stainless steel isolation diaphragm diffusion silicon pressure core body, the pressure core body adopts the process of laser trimming resistor for a wide temperature range of zero and sensitivity temperature compensation. Special cable for air-venting conduit and waterproof technology ensures water tightness, and ventilation between inside and outside , so as to acquire accurate and stable measuring data.

FEATURES

- High accuracy,high sensitivity
- Fast response
- Good stability
- Strong resistance to interference
- Anti-corrosion material optional
- Low temperature drift
- Wide Temperature Range Compensation

ITEM	Specification
Range	0 ~ 0.5m...200mH2O or 0 ~ 5KPa...2MPa
Output	4-20mA,0-5V,0-10V,RS485
Supply Voltage	10-30VDC,24V typ.
Over Pressure	2×FS
Measuring Medium	The liquid(not sticky) compatible with 316 stainless steel
Total Accuracy	0.1%FS,0.3%FS(0.25%FS),0.5%FS
Long-term Stability	0.1%FS/year typ.,0.2%FS/year max.
Ingress Protection	IP68
Operating Temperature	-40℃~ +80℃
Compensating Temperature	-10℃~ 70℃
Temperature Drifting	0.03%FS/℃ typ.,0.05%FS/℃
Cycle Life	1*10^8 @25℃
Main Material	Sensor:316L,housing:304SS(316L is optional)
Cable	Outer material: PUR,Atmospheric pressure compensation cable, Polymer waterproof plug at cable end
Power Consumption	Current output:(U*0.02)W, Voltage output:(U*0.008)W, Digital output:(U*0.015)W
Load Capacity	Current output:≤(U-7)/0.02Ω, Voltage output:≥100kΩ
Weight(probe unpacked)	Approx. 230g
Storage Condition	10℃-50℃@20%-90%RH

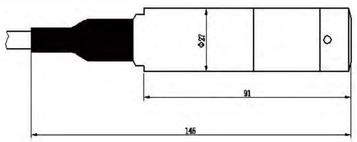

RKL-11 Submersible Liquid Level Transmitter

RKL-11 Submersible Liquid Level Transmitter is with stainless steel isolation diaphragm diffusion silicon pressure core body, the pressure core body adopts the process of laser trimming resistor for a wide temperature range of zero and sensitivity temperature compensation. Special cable for air-venting conduit and waterproof technology ensures water tightness, and ventilation between inside and outside, so as to acquire accurate and stable measuring data.

FEATURES

- High accuracy, high sensitivity
- Fast response
- Good stability
- Strong resistance to interference
- Anti-corrosion material optional
- Low temperature drift
- Temperature compensation

ITEM	Specification
Range	0 ~ 0.5m...200mH2O or 0 ~ 5KPa...2MPa
Output	4-20mA,0-5V,0-10V, RS485
Supply Voltage	10-30VDC
Over Pressure	2×FS
Measuring Medium	The liquid(not sticky) compatible with 316 stainless steel
Total Accuracy	0.5%FS
Long-term Stability	0.2%FS/year
Ingress Protection	IP68
Operating Temperature	-40℃~ +80℃
Compensating Temperature	0℃~50℃
Temperature Drifting	0.05%FS/℃
Cycle Life	1*10^8 @25℃
Main Material	Sensor:316L, housing:304SS (316L is optional)
Cable	Outer material: PVC, Atmospheric pressure compensation cable,
Power Consumption	Current output:(U*0.02) W, Voltage output:(U*0.008) W, Digital output:(U*0.015) W
Load Capacity	Current output:≤(U-7)/0.02Ω, Voltage output:≥100kΩ
Weight(probe unpacked)	Approx. 230g
Storage Condition	10℃-50℃@20%-90%RH

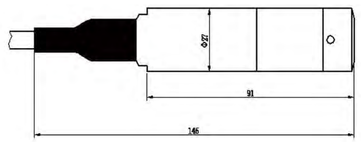

RKL-02 Radar Liquid Level Transmitter

RKL-02 Radar Liquid Level Transmitter antenna emitter narrow microwave pulse, the pulse in the space at the speed of light transmission, met on the surface of measured medium, some of its energy is reflected back, by the same antenna.Firing pulse and receives the pulse interval and the antenna to the surface of the measured medium is proportional to the distance, to calculate the distance on the surface of the antenna to the measured medium.

FEATURES

- Small beam Angle, the energy concentration, strong anti -interference,high accuracy and reliability
- Range of up to 70 meters, covering large reservoir and other water level measurement
- Good stability
- Multiple output signal is optional
- Transmitted power is extremely low, no harm to human body and environment
- False Echo Filtering
- Easy Installation

ITEM	Specification
Range	10m,30m,50m,70m
Output	4-20mA, RS485(MODBUS-RTU)
Supply Voltage	12VDC,24VDC,220VAC
Process connection	G1_1/2,support flange
Working frequency	Range ＜30m：6.8GHz， Range ＞30m/＜70m：26GHz
Accuracy	±3mm
Display	128*64LCD display resolution:1mm
Relay alarm	250VAC/30VDC@5A Optional
Ingress Protection	IP67
Medium temperature	-40～+150℃
Medium pressure	-100～100kPa
Operating Temperature	-40℃~ +85℃
Housing material	Aluminum alloy
Antenna material	304ss
Shock	10m/s²@10～150Hz
Storage Condition	10℃-50℃@20%-90%RH

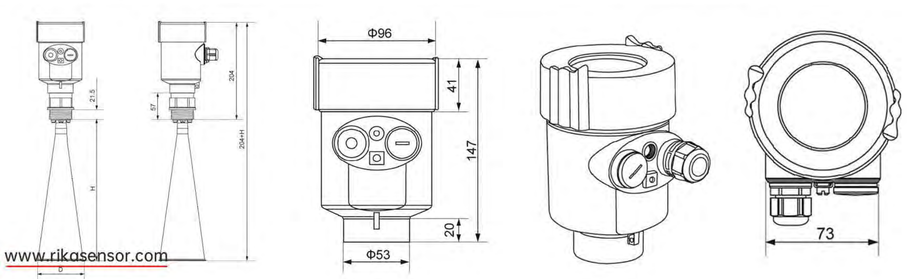

RKL-03 Ultrasonic Liquid Level Transmitter

RKL-03 Ultrasonic Liquid Level Transmitter is a kind of non-contact, high reliability, high cost performance, easy installation and maintenance of material level measuring instrument.It doesn't have to contact medium can meet the requirements of most of the material level measurement.Firing pulse and receives the pulse interval and the antenna to the surface of the measured medium is proportional to the distance, to calculate the distance on the surface of the antenna to the measured medium.The product can cooperate with RK600-01 data logger or general recording instrument is used.

FEATURES

- Range of up to 30 meters
- Level or material measurement
- Good stability
- Response speed is adjustable
- With LCD display,menu settings
- Easy Installation

ITEM	Specification
Range	5m,10m,15m,20m,30m
Output	4-20mA(2wires),4-20mA(4wires),RS485(4wires)
Supply Voltage	24VDC,220VAC
Accuracy	0.5%-1%
Resolution	±3mm or 0.1%FS(take the maximum value)
Display	LCD with English
Control output(optional)	Relay AC250V/8A or 30V/5A
Power consumption	4-wire,without relay:1.9W 4-wire,with relay:3.1W 2-wire,without relay:0.72W
Ingress Protection	Probe:IP68,Display unit:IP66
Operating Temperature	Probe:-40℃~ +85℃,Display unit:-20℃~ +60℃
Housing material	Anti-aging corrosion resistant engineering plastics
Process connection	Range=0-5m:M48*2 Range=0-10m:G2 or M60*2 Range=0-20m:G3 or M78*2 Range=0-30m:G3 M78*2 Range>30m:M108*2
Menu setting	Reference zero point, maximum of measuring range,minimum of measuring range,alarm point,Return difference setting,working mode,response time, parameter correction,communication setting etc.
Storage Condition	10℃-50℃@20%-90%RH

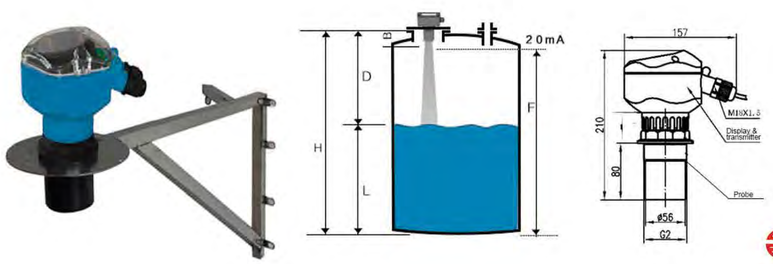

RKL-04 Capacitive Liquid Level Transmitter

Rhe sensing part of the RKL-04 is a coaxial capacitor, when the liquid enters the condenser caused the change of the sensor shell and sensor capacitance between electrodes, the variation through the subsequent acquisition and conversion circuit and precise linear and temperature compensation, the output field required standard voltage, current, the digital signal, sampling frequency is adjustable. Food grade Teflon and 304 stainless steel material with fully welded structure, high health level, high breaking strength; Long - term stability, high reliability. Used for measuring: oil (gasoline, diesel oil, hydraulic oil, lubricating oil), water (sewage), beverage, medical treatment, chemical and other liquid media, suitable for high and low temperature, or even viscous liquid media occasions. Extremely wide measuring range: 0.03.....6m, especially suitable for measuring liquid heights below 500mm.

FEATURES

- Convenient: install through thread or flange, easy to operate, good sealing performance;
- It can be recalibrated externally
- Integrated structure
- suitable for a variety of liquid level (object level) measurement
- The measurement blind area is small (≤10mm, the minimum can reach 5mm) with high precision
- Continuous measurement of liquid in various containers, especially oil level in oil tank;Will not affect the original system;

ITEM	Specification
Range	0-30...100...500...700...3000...6000mm
Output	4-20mA,0-5V, RS485
Supply Voltage	11-33VDC,24V typ.
Comprehensive Accuracy	0.25%FS,0.5%FS (typ.),1.0%FS
Long-term stability	0.2%FS
Zero temperature drift	0.02%FS/℃
Full temperature drift	0.03%FS/℃
Ingress Protection	IP67
Operating Temperature	-40℃~ +80℃, -70 ~ +260℃(optional)
Pressure range	-0.1mpa ~ 0.5mpa
storage temperature	-40 ~ +100℃
Blind area detection	5mm(optional),10mm(typ.)
Probe diameter	Φ16 mm
Fixed thread installation	M20×1.5, G1/2, customized;Flange DN25, DN40, DN50 can be installed
Electrical interface	Direct line
Measuring the dielectric	Oil (gasoline, diesel oil, hydraulic oil, lubricating oil), water (sewage), beverage, medical, chemical and other liquid media

RKL-06 Laser Liquid Level Transmitter

The RKL-06 laser liquid level sensor is a new type of ranging equipment independently developed by our company. It has the advantages of high accuracy, fast response, high power, non-contact measurement and other advantages. It is suitable for water level monitoring occasions such as reservoirs, ship locks, rivers, and urban water. The RKL-06 laser liquid level sensor has the characteristics of high accuracy, low power consumption, easy installation, stable operation, etc. It can accurately measure the liquid level height, and can realize the real-time monitoring of the liquid level height in cooperation with RTU, PLC and other transmission equipment.

FEATURES

- Long distance and high precision: 0.1m-40m range, range can be set, ranging accuracy ±2mm
- Simple operation, continuous measurement, measurement interval can be set
- Digital and analog output: RS485 MODBUS protocol, 4-20MA output
- Low power consumption, wide power supply range
- Explosion-proof design, can be used in dangerous environment

ITEM	Specification	
Range	0.1m to 40m* (adjustable range)	
Accuracy	Typical value: ±2mm	
Types of laser	Red visible light, wavelength 635nm	
Laser level	Stage 2, power & LT;1mW	
Spot Diameter (25 ° C)	It's 10 meters away	6mm
	It's 50 meters away	30mm
Measuring way	Continuous measurement	
Supply	6-28VDC①	
Output	4-20mA, RS485(Modbus-RTU)	
Ingress Protection	,IP67	
Operating Temperature	-30℃ to +70℃	
Process connection	G1-1/2 thread or flange (optional)	
Size and weight	127 mm * 97 mm * 199 mm, 1.5kg	
Measured interval	Adjustable 0-999 seconds (try not to make the laser head work for a long time at high frequency, which may damage the laser head)	
Storage Condition	-30℃ to +80℃@20%-90%RH	

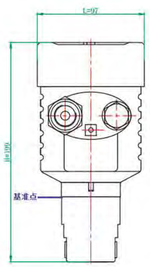

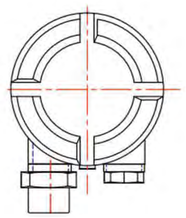

RKL-07 Radar flowmeter

The RKL-07 radar flowmeter can continuously measure the water flow of rivers and open channels, combined with the radar flow meter and the radar water level gauge, the surface velocity and water level are measured in a non-contact manner. For regular channel sections, use conventional mathematical formulas to calculate flow results. For irregular river sections, the flow rate results are obtained by using the point method and calculus calculation. Non-contact measurement method is not affected by sediments, water weeds and other debris, reducing maintenance costs and increasing reliability.

FEATURES

- The two-in-one product performs flow calculation directly
- Simple construction and installation, low power consumption, economical and applicable
- High IP68 protection level, maintenance free
- Does not destroy the water flow state, guarantees the measurement data accurate
- 7X24 online automatic monitoring, unattended

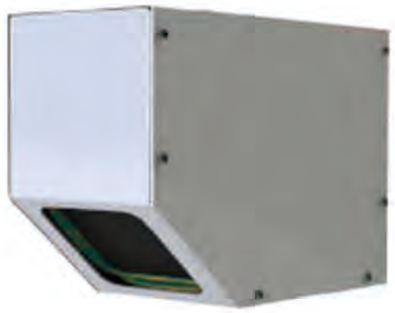

ITEM	Speed	Distance
frequency	24GHz	24-26GHz
range	0.1 ~ 20 m/s (It has to do with the flow pattern)	0-45m
Accuracy	±0.01m/s ; ±1%FS	±2mm
Resolution	0.01m/s	1mm
beam Angle	12 °	10 °
Pitch Angle	30 ~ 70 ° (Recommendation 55 ~ 60°; Roll Angle < ±2° is recommended)	
Intelligent perception and compensation of attitude Angle	Accuracy±0.5°; Resolution±0.1°	
Supply	DC6 ~ 30V (suggested use 12 v)	
Power consumption	Working current :80mA@12V; Standby current :55mA@12V	
Output	RS485(MODBUS-RTU)	
Working temperature	- 40 ℃ ~ + 80 ℃	
Protection grade	IP68	
Product size	313x137x271mm	
weight	4.3 Kg	
Cable length	10 m(default), customizable	

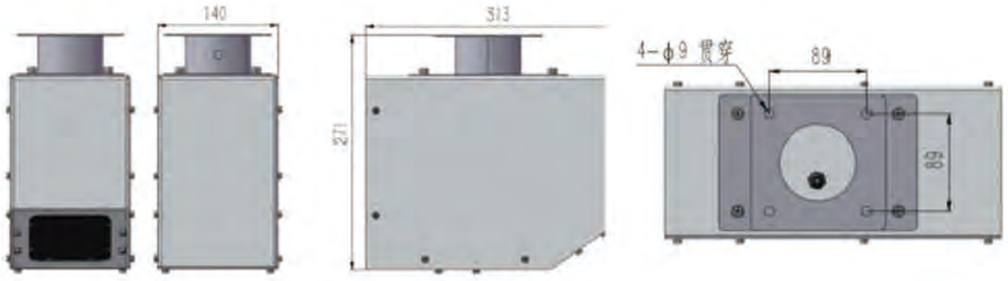

RK95-01 Multi-Plate Radiation Shield(instrument shelter)

The Multi-Plate Radiation Shield protects temperature,relative humidity or barometric pressure sensors from error-producing solar radiation and precipitation. This shield relies on a combination of plate geometry, material and natural ventilation to provide effective shielding. The radiation shield reflect sunlight from any direction, prevent sun direct radiation and reflection on the ground to the sensor radiation, to protect the instrument from the effects of strong winds, rain, snow, etc.Freely through the air, making instrument work in ventilated environment, to ensure the accuracy of measured data.Products with high reflectivity and low thermal conductivity, resistance to ultraviolet ray function, can be used in extreme weather conditions.

INSTALLATION TIPS

- Good air circulation around shield
- Away from large masses (asphalt, masts, solar panels) especially metal items
- Away from exhaust vents,electrical machinery and motors
- Away from standing water, water fountains and sprinklers

ITEM	Specifications
Number of plates	4 -20 plates optional,typ.:11,14,19
Color	White
Material	Anti-radiation ABS engineering plastics & Stainless steel screw
Operating temperature	-40℃-+75℃
Dimension	Inner diameter:62mm,Outer diameter:140mm/180mm Height:180mm(11 plates),220mm(14 plates),280mm(19 plates)
Optional accessories	Metal bracket(304SS),Embrace hoop screw(inner diameter:60mm,304SS)

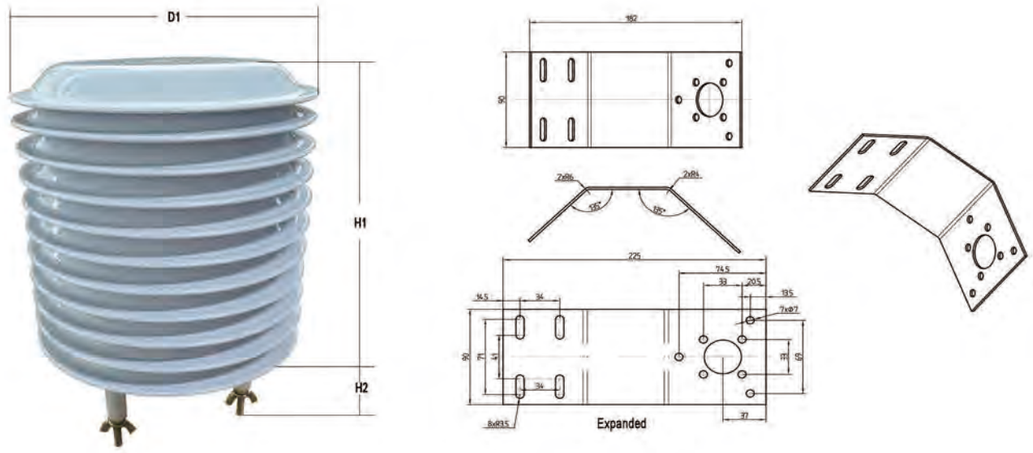

RK95-02 Lighter Multi-Plate Radiation Shield

The Multi-Plate Radiation Shield protects temperature,relative humidity or barometric pressure sensors from error-producing solar radiation and precipitation. This shield relies on a combination of plate geometry, material and natural ventilation to provide effective shielding. The radiation shield reflect sunlight from any direction, prevent sun direct radiation and reflection on the ground to the sensor radiation, to protect the instrument from the effects of strong winds, rain, snow, etc.Freely through the air, making instrument work in ventilated environment, to ensure the accuracy of measured data.Products with high reflectivity and low thermal conductivity, resistance to ultraviolet ray function, can be used in extreme weather conditions.

INSTALLATION TIPS

- Good air circulation around shield
- Away from large masses (asphalt, masts, solar panels) especially metal items
- Away from exhaust vents,electrical machinery and motors
- Away from standing water, water fountains and sprinklers

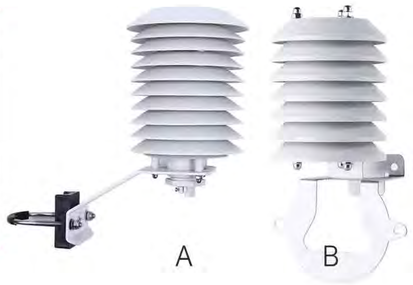

ITEM		A	B
Number of plates		10	7
Color		Pure white	
Dimensions(mm):	Inner diameter	30	22
	Outer diameter	130	79
	Internal height	135	80
Material		Special engineering plastics against radiation & Stainless steel screw	
Install accessories(attached)		Stainless steel bracket	
Operating temperature		-40℃-+75℃	

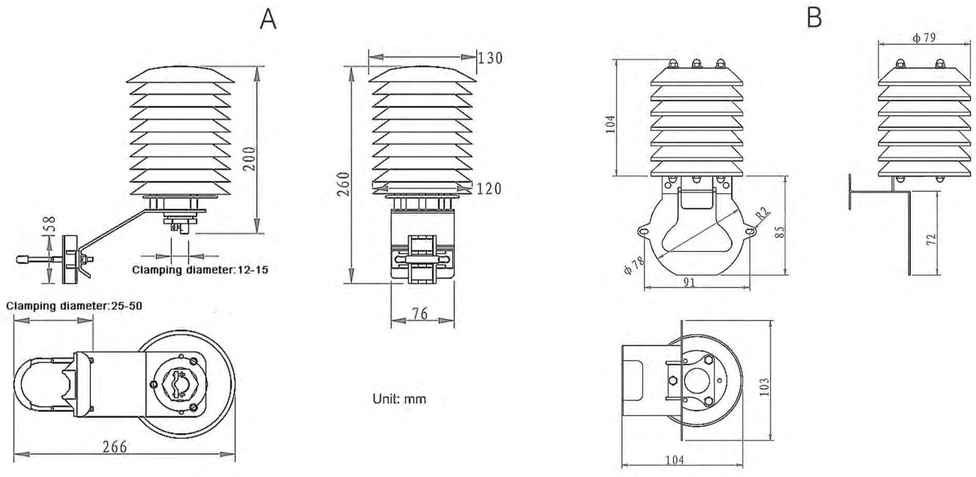

RK95-07 Multi-Plate Radiation Shield(instrument shelter)

The Multi-Plate Radiation Shield protects temperature,relative humidity or barometric pressure sensors from error-producing solar radiation and precipitation. This shield relies on a combination of plate geometry, material and natural ventilation to provide effective shielding. The radiation shield reflect sunlight from any direction, prevent sun direct radiation and reflection on the ground to the sensor radiation, to protect the instrument from the effects of strong winds, rain, snow, etc.Freely through the air, making instrument work in ventilated environment, to ensure the accuracy of measured data.Products with high reflectivity and low thermal conductivity, resistance to ultraviolet ray function, can be used in extreme weather conditions.

INSTALLATION TIPS

- Good air circulation around shield
- Away from large masses (asphalt, masts, solar panels) especially metal items
- Away from exhaust vents,electrical machinery and motors
- Away from standing water, water fountains and sprinklers
- Perfect match Vaisala HMP155， Observator OMC - 406 sensors

ITEM	Specifications
Number of plates	19 plates①
Color	Out surface:Light grey,inner surface:black
Material	PC & 304SS screw
Operating temperature	-40℃-+80℃
Sensor installation interface	Glands: M32*1.5(Suitable for 16-20 mm diameter probe)
Installation bracket	304SS bracket

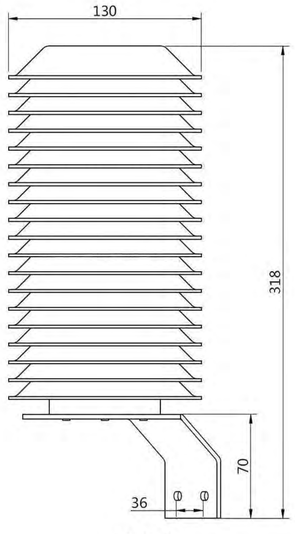

RK95-07

RK95-08 Fan Aspirated Multi-Plate Radiation Shield(instrument shelter)

The Multi-Plate Radiation Shield protects temperature,relative humidity or barometric pressure sensors from error-producing solar radiation and precipitation. This shield relies on a combination of plate geometry, material and natural ventilation to provide effective shielding. The radiation shield reflect sunlight from any direction, prevent sun direct radiation and reflection on the ground to the sensor radiation, to protect the instrument from the effects of strong winds, rain, snow, etc.Freely through the air, making instrument work in ventilated environment, to ensure the accuracy of measured data.Products with high reflectivity and low thermal conductivity, resistance to ultraviolet ray function, can be used in extreme weather conditions.The product with breathing fan, make sure the screen inside and outside environment difference is minimal.

INSTALLATION TIPS

- Good air circulation around shield
- Away from large masses (asphalt, masts, solar panels) especially metal items
- Away from exhaust vents,electrical machinery and motors
- Away from standing water, water fountains and sprinklers

ITEM	Specifications
Number of plates	7-20 plates optional,typ.:11,14,19
Color	White
Material	Anti-radiation engineering plastics & Stainless steel screw
Supply of fan	7-13.8VDC(typ.12VDC)
Rated power	1W
Operating temperature	-40℃-+75℃
Dimension	Inner diameter:62mm,Outer diameter:140mm/180mm
	Height:180mm(11 plates),220mm(14 plates),280mm(19 plates)
Optional accessories	Metal bracket(304SS),Embrace hoop screw(inner diameter:60mm,304SS)

RK95-03 Solar Power Supply System

Solar power supply system consists of solar panel, solar controller, battery and the inverter (optional). Solar energy is a clean renewable new energy, has no moving parts, no noise, no pollution, high reliability. It can provide reliable power to sensors or weather stations, mainly used for wireless sensor, automatic test station, automatic weather stations and other power supply.

INSTALLATION TIPS

- Controller automatic identification 12VDC/24VDC
- Key operation, automatic save settings parameters, low standby power consumption
- high charging efficiency
- 4 work modes optional: normally open, light mode, light and time mode, manual mode
- With battery under-voltage, over-voltage, output overload, short circuit, battery or solar panels reverse connect protection function etc.
- Fault code instructions
- Waterproof grade IP67

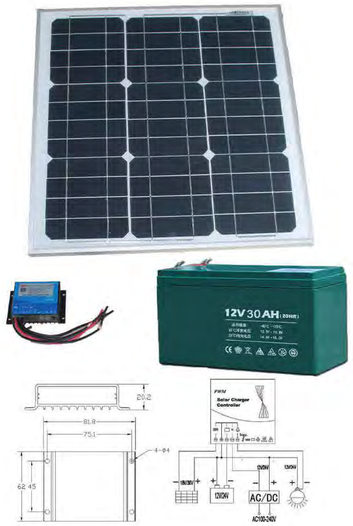

ITEM	Specifications	
Rated current	10A	
Rated voltage(self-adaption)	12V	24V
Solar panel voltage	18V	36V
Start voltage	7V	14V
Shutoff voltage	3V	6V
Float charging voltage	13.8V	27.6V
Boost charging voltage	14.8V	29.6V
Equalizing charging voltage	14.4V	28.8V
Over voltage protection	16.5V	33.0V
Over voltage recovery	15.0V	30.0V
Under voltage protection	10.8V	21.6V
Under voltage recovery	12.8V	25.6V
Commercial power start voltage①	≤10.8V	≤21.6V
Commercial power shutoff voltage	≥12	≥25.6V
Circuit protection	short protection	
No-load current	≤12mA@12V	
Ingress Protection	IP67	
Working temperature	-40℃ ~ +70℃	
Dimension	81.0*62.0*20.0mm	

Accessories

RK95-56 Adjustable Tilt Angle Bracket

RK95-54 Bracket for Ultrasonic Sensor

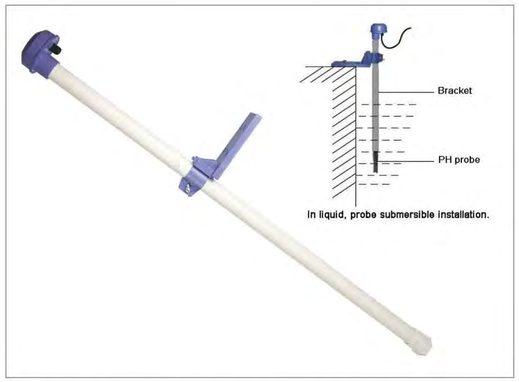

RK95-51 Bracket for PH,EC,DO,ORP Sensor

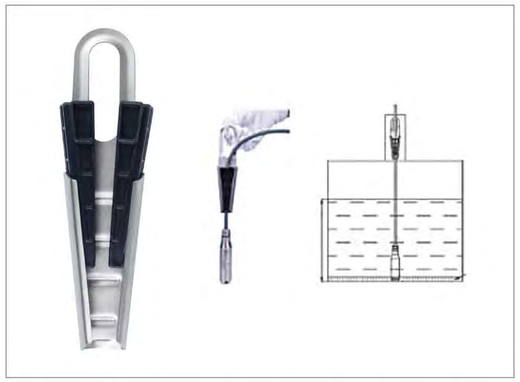

RK95-33 Bracket for Sumbersible Liquid Level Sensor

RK95-26 Protective Box for Data Logger

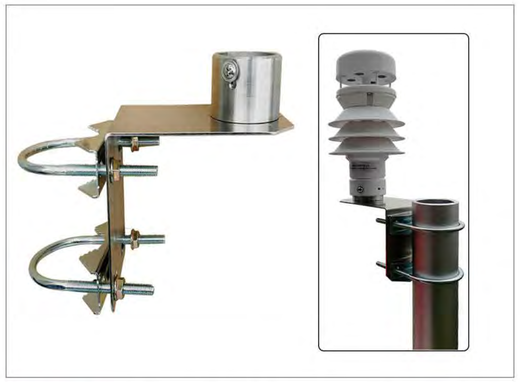

RK95-53 Bracket for Ultrasonic Anemometer

Accessories

RK95-11 2.5m Bracket for Weather Station

RK95-21 Fluorescent Film Cap for RK500-07

RK95-14 Filter for RK400-01

RK95-52 Flow Cell

RIKA CLOUD

RIKA cloud is a universal IoT platform that integrates solutions of various industries as one. It is an IoT system that integrates data collection, data analysis, remote control and early warning release, etc. with solutions as the benchmark.

- Cloud ecosystem intergrates with software and hardware, one-stop solution by providing more than 300 kinds of sensors.
- The integration of various industry solutions, with data collection, analysis, early warning, linkage control function.
- Customized hardware access platform services, whole-process technical support.

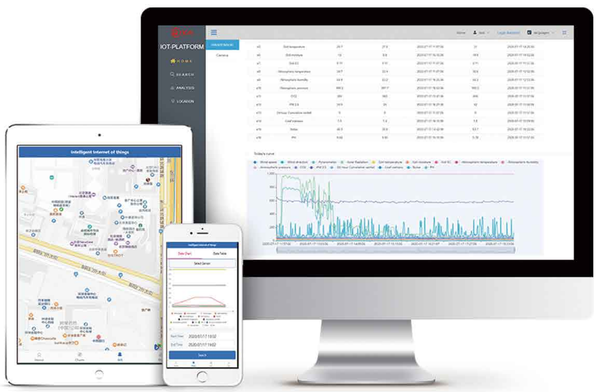

Environmental Information | Meteorological Conditions | Data Display | Real-time Monitoring | Interconnected Control | Map Presentation
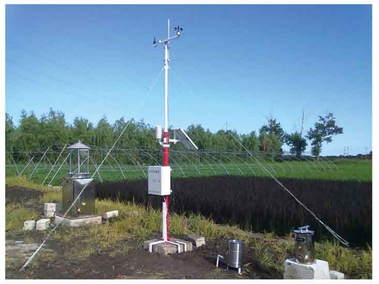
CASE SHOW